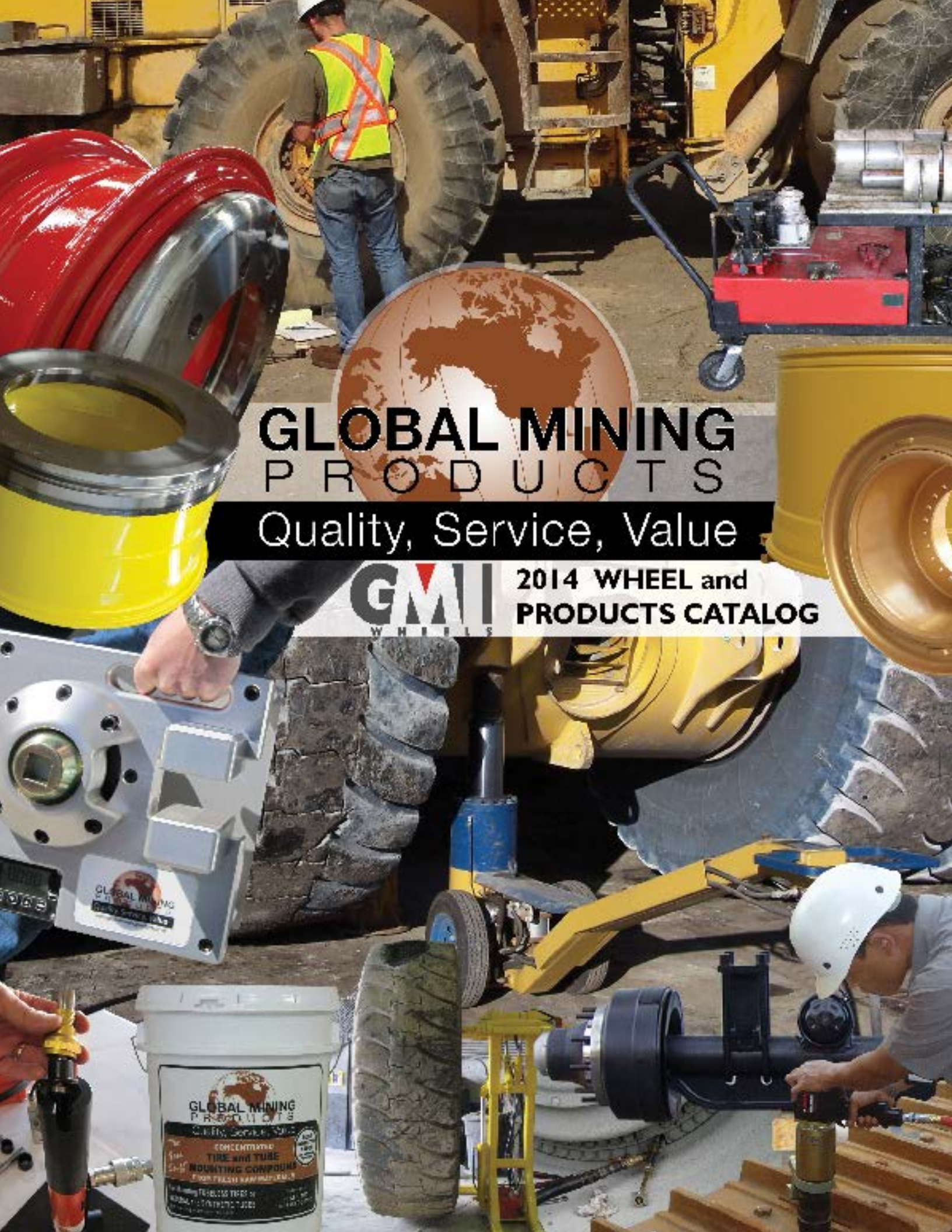
GLOBAL MINING
PRODUCTS
Quality, Service, Value
GMI
WHEELS
2014 WHEEL and
PRODUCTS CATALOG
GLOBAL MINING
PRODUCTS
CONCENTRATED
TIRE and TUBE
MOUNTING COMPOUND

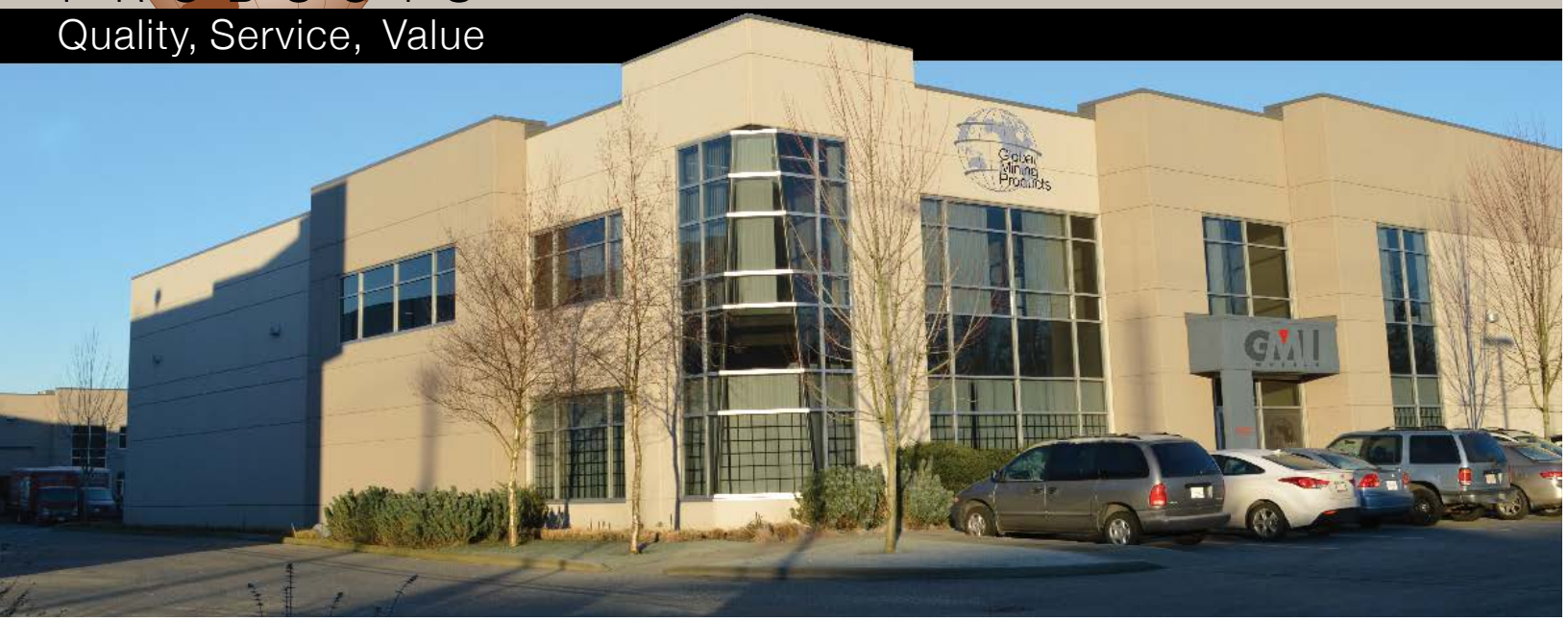

Global Mining Industries boasts over 100 combined years of hands on experience in the heavy equipment industry. At Global Mining Industries, We share a vision to provide the highest quality products and services to the Mining, Trucking, Oil and Gas Industries at reasonable prices.

At Global Mining Industries we are committed to delivering the best quality & value to our customers by tailoring our products & specialized services to our customers applications, resulting in safety, productivity and cost savings. Our commitment to ensuring total customer satisfaction has led to the expansion of our company with offices in the USA, Canada, South East Asia and growing.

CANADA
107-2567 192nd Street
Surrey, B.C., Canada V3S 3X1
Phone: (604) 538-0058 TF: 877-576-2855
Fax: (604) 541-2850 TF: 877-576-2854

USA
400 Front Street
Elko, NV, USA 89801
Phone: (775) 778-3410
Fax: (775) 778-3418

INDONESIA
PT GloMinPro Indonesia
Jl. Projakal Km.5,5 No. 65 RT. 031
Graha Indah Balikpapan 76126
East Kalimantan, Indonesia
Phone: 62-542-874097
Fax: 62-542-874039

Ensuring the Highest Quality Products

At Global Mining Industries we incorporate the latest CAD CAM technology and innovated solutions in our manufacturing process to ensure our products exceed industry safety standards and performance expectations. Global Mining personnel execute quality assurance testing throughout the entire wheel fabrication process including but not limited to:

- Latest CNC Machinery
- Planning and development of new products
- Inspection of incoming materials
- Quality control throughout manufacturing process
- Computer aided design & manufacturing
- Inspection of final products
- Packaging and logistics control
- Quality after-sales service

Table of Contents

RIM AND WHEEL PRODUCTS

Wheels and Rims 5
2pc Tube Type Wheels 8
3pc Tube Type Wheels 9
4pc Tube Type Wheels 10
1pc Tubeless Wheels 11
3pc Tubeless Wheels 13
5pc Tubeless Wheels 14
Fully Machined 5pc Wheels 15
Fully Machined 5pc Rims 16
FTF Series 5pc Tubeless Wheels.....17
FTF Series 5pc Tubeless Rims 18
FTF Series 6pc & 7pc Rims 18
FTF Series 6pc & 7pc Wheels 19
Rim Stand 20
Tire Evacuator 21
Tire Gauges 21, 79
Pressure/Temperature Gauge 23
Valve Assembly Tool 24
Rapid Deflation Connector & Unit 25
Wheel Attaching Parts 26
Non-Metallic Valve Cap 26
Thread Test Gauges 27
Axles 28
Tire & Tube and TLC 30

TORQUE AND BOLTING

Pneumatic Torque Tools 32
Transducer Verification Series 36
RT Remote Transducer 37
Electronic Torque Tools 38
Battery Torque Tools 42
Digital Battery Torque Tools 43
Electric Torque Tools 44
Digital Electric Torque Tools 45
Reaction Arms 46
Nose Extensions 48
Smart Sockets 49
Calibration Systems 50
Manual Torque Multipliers 52
Sockets 53
Tool Repair Services 54
Rad Rental Tool Program 56

TIRE INFLATION PRODUCTS

Super Giant Bore 58
Super Excel 61
Super Large Bore 64
Large Bore 69
Tractor & Grader 75
Truck & Bus 77
Tools 80
Inflators 82
Chucks 83
O-Rings, L-Rings & Grommets 84

HYDRAULIC TOOLS

Modular Jack System 86
BlackJack System 88
Jack Stands 89
Pump Carts 89
Component Handlers 90
Swivel Saddle 90
Bull Dog 90
Load Holding Rings 91
Extensions and Bases 93
Suspension Adapters 93
Heavy Lift Tonnage Jacks 94
Heavy Lift Safety Stands 96
Single Stage Jacks.....98
Bead Breakers 99
Pumps 100
Cylinders 101

TIRE REPAIR SYSTEMS

Vulcanising Equipment 106
Tire Trees 108
Extruder 109
ManLifts 110

GLOBAL MINING PRODUCTS

Quality, Service, Value

Rim and Wheel Products

Wheels, Rims and Accessories

15" to 63" for both solid and pneumatic tire applications

In this era of radialization, higher tire air pressures, more powerful high torque trucks and loaders, longer hauls, higher speeds and heavier loads, Wheel, Rim and Tire safety with longevity becomes of major importance. Global Mining's knowledgeable staff have over 100 years experience in off road applications, to offer you accurate information on the proper wheel/rim applications.

Specializing in the following applications
- All Earthmover Rim and Wheel Applications.
- Solid Tire Applications.
- Special Custom made Wheels, All Applications.
- Spacer and Wedge Bands.
- Grader - Industrial - Construction Rims & Wheels
- Clamps, Studs and Nuts
- Side Flanges, Lock Rings, Bead Seat Bands & O-Rings
- All Hand and Hydraulic Tools.

Call for an Onsite Evaluation
- Safer, longer rim and tire life
- Quality service with experienced staff

Global Mining Products Inc | Ph: 877.576.2855 | Fax: 877.576.2854

SAFETY ALERT WARNING

DEFUSE THE BOMB!! THERE IS ENOUGH ENERGY CONTAINED IN A 40.00 R57 TIRE AND WHEEL ASSEMBLY TO BLOW A 200 LB. MINER OVER 1 MILE IN THE AIR.

ALWAYS DEFLATE THE TIRE BEFORE UNBOLTING OR UNCLAMPING THE WHEEL OR RIM!

GLOBAL MINING PRODUCTS

Quality, Service, Value

The tasks of servicing tires and wheels can be extremely dangerous and should be performed by trained personnel only, using the correct tools and following specific procedures. Failure to heed this warning could lead to serious injury or death. Read and understand all safety information before attempting tire/wheel servicing. The responsibility for implementation of safety rests with operational and supervisory personnel carrying out the actual service work. In addition, refer to the tire manufacturer's safety recommendations and procedures. Wear protective gloves, footwear, safety glasses and head gear when servicing tire and wheel components.

Call Global Mining Products for Safety Wheel, Rim, Accessory and Tire Mounting and Demounting Operation and Maintenance Literature.

2-Piece Tube Type Wheels

Size	Description	Tire Size	Part Number
10 x 5.00	2 Piece Tube Type Wheel	650-10	WA2-1050-K
15 x 6.00	2 Piece Tube Type Wheel	700-15	WA2-1560-K
15 x 6.50	2 Piece Tube Type Wheel	825-15	WA2-1565-K
15 x 7.00	2 Piece Tube Type Wheel	28/9-15	WA2-1570-K
15 x 7.50	2 Piece Tube Type Wheel	250-15	WA2-1575-K
15 x 10	2 Piece Tube Type Wheel	1000-15	WA2-1510-K
20 x 6.50	2 Piece Tube Type Wheel	900-20	WA2-2065-K
20 x 7.00	2 Piece Tube Type Wheel	900/1000-20	WA2-2070-K
20 x 7.50	2 Piece Tube Type Wheel	1000-20	WA2-2075-K
20 x 8.00	2 Piece Tube Type Wheel	1000/1200-20	WA2-2080-K
24 x 8.50	2 Piece Tube Type Wheel	1200-24	WA2-2485-K

Global Mining Products Inc | Ph: 877.576.2855 | Fax: 877.576.2854

3-Piece Tube Type Wheels

Size	Description	Tire Size	Part Number
8 x 4.33	3 Piece Tube Type Wheel	18/7-8	WA3-08433-K
12 x 5.00	3 Piece Tube Type Wheel	700-12	WA3-1250-K
15 x 6.00	3 Piece Tube Type Wheel	700-15	WA3-1560-K
15 x 6.50	3 Piece Tube Type Wheel	825-15	WA3-1565-K
15 x 6.50 DUAL	3 Piece Tube Type Wheel	825-15	WA3-1565-K
1 5 x 7.00	3 Piece Tube Type Wheel	28 x 9-15	WA3-1570-K
15 x 7.50	3 Piece Tube Type Wheel	250-15	WA3-1575-K
15 x 8.00	3 Piece Tube Type Wheel	300-15	WA3-1580-K
15 x 9.75	3 Piece Tube Type Wheel	32/12.1-15 28/12.5-15	WA3-15975-K
15 x 11	3 Piece Tube Type Wheel	4.5R15	WA3-1511-K
16 x 5.50	3 Piece Tube Type Wheel	750-16	WA3-1655-K
16 x 6.00	3 Piece Tube Type Wheel	750-16	WA3-1660-K
20 x 6.50	3 Piece Tube Type Wheel	900-20	WA3-2065-K
20 x 7.50	3 Piece Tube Type Wheel	1000-20	WA3-2075-K
20 x 7.50 DUAL	3 Piece Tube Type Wheel	1000-20	WA3-2075-K
20 x 8.00	3 Piece Tube Type Wheel	1000/1200 x 20	WA3-2080-K
20 x 8.50	3 Piece Tube Type Wheel	1200-20	WA3-2085-K
20 x 10	3 Piece Tube Type Wheel	1400 – 20 SOLID	WA3-2010-K
24 x 8.00	3 Piece Tube Type Wheel	1200-24	WA3-2480-K
24 x 8.50	3 Piece Tube Type Wheel	1200-24 1400-24	WA3-2485-K
24 x 9.00	3 Piece Tube Type Wheel	12.00/13.00 1400 -24	WA3-2490-K
24 x 10	3 Piece Tube Type Wheel	1400-24	WA3-2410-K

4-Piece Tube Type Wheels

Size	Description	Tire Size	Part Number
8 x 3.00	4 Piece Tube Type Wheel	500-8	WA4-0830-K
8 x 4.33	4 Piece Tube Type Wheel	18/7-8 16/6-8	WA4-08433-K
9 x 4.00	4 Piece Tube Type Wheel	600-9	WA4-0940-K
9 x 6.00	4 Piece Tube Type Wheel	21/8-9	WA4-0960-K
10 x 5.00	4 Piece Tube Type Wheel	650-10	WA4-1050-K
10 x 6.50	4 Piece Tube Type Wheel	23/9-10 200/50-10	WA4-1065-K
12 x 5.00	4 Piece Tube Type Wheel	700-12	WA4-1250-K
12 x 8.00	4 Piece Tube Type Wheel	27/10-12 23/10-12	WA4-1280-K
15 x 6.50	4 Piece Tube Type Wheel	825-15	WA4-1565-K
15 x 7.00	4 Piece Tube Type Wheel	28/9-15	WA4-1570-K
15 x 7.50	4 Piece Tube Type Wheel	250-15	WA4-1575-K
15 x 8.00	4 Piece Tube Type Wheel	300-15	WA3-1580-K
15 x 9.75	4 Piece Tube Type Wheel	32/12.1-15 28/12.5-15	WA4-15975-K
20 x 7.50 DUAL	4 Piece Tube Type Wheel	1000-20	WA4-2075-K
20 x 8.00	4 Piece Tube Type Wheel	1200-20	WA4-2080-K
20 x 8.00 DUAL	4 Piece Tube Type Wheel	1200-20	WA4-2080-K
24 x 8.50	4 Piece Tube Type Wheel	1200-24	WA4-2485-K
24 x 9.00	4 Piece Tube Type Wheel	1200-24	WA4-2490-K
24 x 10	4 Piece Tube Type Wheel	1400-24	WA4-2410-K

1-Piece Tubeless Wheels

Size	Description	Tire Size	Part Number
12 x 7.00	1 Piece Tubeless Wheel	23/10.5-12	W1-1270-A
12 x 8.50	1 Piece Tubeless Wheel	26/12-12	W1-1285-A
15 x 8.00	1 Piece Tubeless Wheel	27/9.50 -15	W1-1580-A
15 x 13	1 Piece Tubeless Wheel	31/15.5-15	W1-1513-A
16 x 5.50	1 Piece Tubeless Wheel	7.50-16	W1-1655-A
16 x 8.00	1 Piece Tubeless Wheel	1100-16	W1-1680-A
16.1 x 11	1 Piece Tubeless Wheel	14L-16.1	W1-16111-A
16.5 x 8.25	1 Piece Tubeless Wheel	10-16.5	W1-165825-A
16.5 x 9.75	1 Piece Tubeless Wheel	12-16.5	W1-165975-A
17.5 x 6.75	1 Piece Tubeless Wheel	8.75-17.5	W1-175675-A
17.5 x 10.50	1 Piece Tubeless Wheel	14-17.5	W1-175105-A
18 x 11	1 Piece Tubeless Wheel		W1-1811-A

****** many other Tubeless wheels available to suit all Rubber Tired Applications from Common Applications to Severe Applications***

1-Piece Tubeless Wheels

Size	Description	Tire Size	Part Number
19.5 x 6.75	1 Piece Tubeless Wheel	245/70R19.5	W1-195675-A
19.5 x 8.25	1 Piece Tubeless Wheel	11R19.5	W1-195825-A
20 x 8.00	1 Piece Tubeless Wheel	900-20 11.25	W1-2080-A
20 x 10	1 Piece Tubeless Wheel	11.00-20	W1-2010-A
20.5 x 14	1 Piece Tubeless Wheel	18R20.5	W1-20514-A
20.5 x 18	1 Piece Tubeless Wheel	24R20.5	W1-20518-A
22.5 x 7.5	1 Piece Tubeless Wheel	10R22.5	W1-22575-A
22.5 x 8.25	1 Piece Tubeless Wheel	11R22.5	W1-225825-A
22.5 x 9.00	1 Piece Tubeless Wheel	315 65 22.5	W1-22590-A
22.5 x 11.75	1 Piece Tubeless Wheel	15R22.5	W1-2251175-A
22.5 x 13	1 Piece Tubeless Wheel	18R22.5	W1-22513-A
24 x 9.00	1 Piece Tubeless Wheel	14.00-24	W1-2490-A
24 x 10	1 Piece Tubeless Wheel	12.4-24	W1-2410-A
24 x 14	1 Piece Tubeless Wheel	17.5-24	W1-2414-A
24 x 15	1 Piece Tubeless Wheel	17.5-24	W1-2415-A
24 x 16	1 Piece Tubeless Wheel	19.5-24	W1-2416-A
25 x 13	1 Piece Tubeless Wheel	15.5R25	W1-2513-A
25 x 24	1 Piece Tubeless Wheel		W1-2524-A
26 x 20	1 Piece Tubeless Wheel	23.1-26	W1-2620-A
26 x 25	1 Piece Tubeless Wheel	28L-26	W1-2625-A
28 x 12	1 Piece Tubeless Wheel	13.6-28	W1-2812-A
28 x 15	1 Piece Tubeless Wheel	16.9-28	W1-2815-A
30 x 15	1 Piece Tubeless Wheel	16.9-30	W1-3015-A
30 x 20	1 Piece Tubeless Wheel	23.1-30	W1-3020-A
32 x 21	1 Piece Tubeless Wheel	24.5-32	W1-3221-A
32 x 27	1 Piece Tubeless Wheel	30.5-32	W1-3227-A
38 x 12	1 Piece Tubeless Wheel	14.9-38	W1-3812-A

3-Piece Tubeless Wheels

Size	Description	Tire Size	Part Number
15 x 6.50	3 Piece Tubeless Wheel	825R15	WA3-1565-A
15 x 6.50 DUAL	3 Piece Tubeless Wheel	825 R15	WA3-1565-A
15 x 7.00	3 Piece Tubeless Wheel	225/75R15	WA3-1570-A
15 x 7.50	3 Piece Tubeless Wheel	250/70R15	WA3-1575-A
15 x 8.00	3 Piece Tubeless Wheel	315/70R15	WA3-1580-A
15 x 9.75	3 Piece Tubeless Wheel	355/65R15	WA3-15975-A
16 x 5.50	3 Piece Tubeless Wheel	600-16	WA3-1655-A
20 x 7.50	3 Piece Tubeless Wheel	1000 R20	WA3-2075-A
20 x 7.50 DUAL	3 Piece Tubeless Wheel	1000 R20	WA3-2075-A
20 x 8.0	3 Piece Tubeless Wheel	1200 R20	WA3-2080-A
20 x 8.00 DUAL	3 Piece Tubeless Wheel	1200 R20	WA3-2080-A
20 x 8.50	3 Piece Tubeless Wheel	1200-20	WA3-2085-A
20 x 10	3 Piece Tubeless Wheel	1200-20	WA3-2010-A
21 x 18	3 Piece Tubeless Wheel	2400-21	WA3-2118-A
24 x 8.00	3 Piece Tubeless Wheel	1200-24	WA3-2480-A
24 x 10	3 Piece Tubeless Wheel	1400-24	WA3-2410-A
25 x 9.50	3 Piece Tubeless Wheel	1400-25	WA3-2595-A
25 x 10	3 Piece Tubeless Wheel	1400-25	WA3-2510-A
25 x 12	3 Piece Tubeless Wheel	39.5/80R25	WA3-2512-A
25 x 14	3 Piece Tubeless Wheel	17.5-25	WA3-2514-A
25 x 17	3 Piece Tubeless Wheel	2100-25	WA3-2517-A
25 x 36	3 Piece Tubeless Wheel	66/43-25	WA3-2536-A

5-Piece Tubeless Wheels

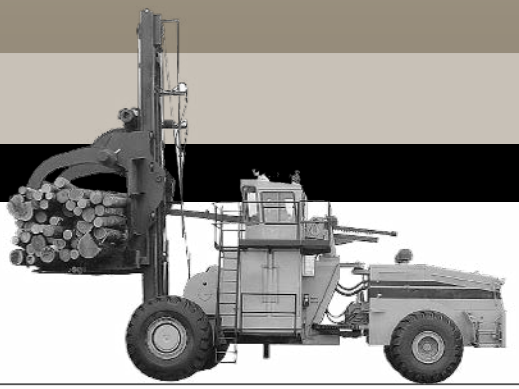

Size	Description	Tire Size	Part #	SR	BB	LR
24 x 9.00	5 Piece Tubeless Wheel	1200-24	WA5-2490-A	SR1524	BB24EM	LR24EM
24 x 10	5 Piece Tubeless Wheel	1400-24	WA5-2410-A	SR2024	BB24EM	LR24EM
25 x 10	5 Piece Tubeless Wheel	1400-25	WA5-2510-A	SR1525	BB25EM	LR25EM
25 x 11.25	5 Piece Tubeless Wheel	1600-25	WA5-2511-A	SR2025	BB25EM	LR25EM
25 x 12	5 Piece Tubeless Wheel	15.5-25	WA5-2512-A	SR2025	BB25EM	LR25EM
25 x 13	5 Piece Tubeless Wheel	1800-25	WA5-2513-A	SR2525	BB25EM	LR25EM
25 x 14	5 Piece Tubeless Wheel	2100-25	WA5-2514-A	SR1525	BB25EM	LR25EM
25 x 15	5 Piece Tubeless Wheel	2100-25	WA5-2515-A	SR3025	BB25EM	LR25EM
25 x 17	5 Piece Tubeless Wheel	2400-25	WA5-2517-A	SR2025	BB25EM	LR25EM
25 x 19.50	5 Piece Tubeless Wheel	23.5-25	WA5-2519-A	SR2525	BB25EM	LR25RM
25 x 22	5 Piece Tubeless Wheel	26.5-25 705/65R25 750/65R25 30/65R25 85/80R25 75/70R25	WA5-2522-A	SR3025	BB25EM	LR25EM
25 x 25	5 Piece Tubeless Wheel	29.5-25 775/70R25 29.5/70R25 850/65R25 32/65R25	WA5-2525-A	SR3525	BB25EM	LR25EM
29 X 25	5 Piece Tubeless Wheel	29.5-25	WA5-2925-A	SR3529	BB29EM	LR29EM
33 x 13	5 Piece Tubeless Wheel	1800-33	WA5-3313-A	SR2533	BB33EM	LR33EM
33 x 15	5 Piece Tubeless Wheel	1800-33	WA5-3315-A	SR3035	BB33	LR33W
33 x 27	5 Piece Tubeless Wheel	33.5-33	WA5-3327-A	SR3533	BB33EM	LR33EM
35 x 15	5 Piece Tubeless Wheel	2100-35	WA5-3515-A	SR3035	BB35	LR35
35 x 17	5 Piece Tubeless Wheel	2400-35	WA5-3517-A	SR3535	BB35	LR35W
35 x 28	5 Piece Tubeless Wheel	33.5-35	WA5-3528-A	SR3535	BB35	LR35EM
39 x 32	5 Piece Tubeless Wheel	37.5-39	WA5-3932-A	SR3539	BB39	LR39EM
45 x 36	5 Piece Tubeless Wheel	45/65-45	WA5-4536-A	SR4545	BB45	LR45EM
49 x 17	5 Piece Tubeless Wheel	2400-49	WA5-4917-A	SR3549	BB49	LR49W
49 x 19	5 Piece Tubeless Wheel	2700-49	WA5-4919-A	SR4049	BB49	LR49W

We also make all sizes of Earth Mover Wheels and Rims for all Earthmover and Mining through 63" Diameters

Please Call ***877.576.2855*** for additional information concerning your applications

Fully Machined Extended Life Application
5-Piece Wheels

Size	Description	Tire Size	Part #	SR	BB	LR
45 x 36	5 Piece Tubeless Wheel	45/65-45	WA5-4536-A	SR-4545	BB-45	LR-45EM
49 x 17	5 Piece Tubeless Wheel	2400-49	WA5-4917-A	SR-3549	BB-49	LR-49W/EV
49 x 19	5 Piece Tubeless Wheel	2700-49	WA5-4919-A	SR-4049	BB-49	LR-49W/EV
49 x 22	5 Piece Tubeless Wheel	31.80R49	WA5-4922-A	SR-3549	BB-49	LR-49HD
51 x 24	5 Piece Tubeless Wheel	33.00R51	WA5-5124-A	SR-5051	BB-51HD	LR-51HD
51 x 26	5 Piece Tubeless Wheel	36.00R51	WA5-5126-A	SR-5051	BB-51HD	LR-51HD
57 x 29	5 Piece Tubeless Wheel	37.00R57 40.00R57 46/90R57	WA5-5729-A	SR-6057	BB-57HD	LR-57HD
57 x 32	5 Piece Tubeless Wheel	46/90R57	WA5-5732-A	SR-6057	BB-57HD	LR-57HD
57 x 36	5 Piece Tubeless Wheel	50/80R57	WA5-5736-A	SR-6057	BB-57HD	LR-57HD
57 x 44	5 Piece Tubeless Wheel	55/80R57	WA5-5744-A	SR-5057	BB-57HD	LR-57HD
57 x 47	5 Piece Tubeless Wheel	60/85-57	WA5-5747-A	SR-5057	BB-57HD	LR-57HD
57 x 50	5 Piece Tubeless Wheel	70/70-57	WA5-5750-A	SR-6057	BB-57HD	LR-57HD

Fully Machined Extended Life Application
5-Piece Rims

Size	Description	Tire Size	Part #	SR	BB	LR
24 x 10	5 Piece Tubeless Rim	1400-24	RA5-2410-A	SR-2024	BB-24EM	LR-24EM
25 x 10	5 Piece Tubeless Rim	1400-25	RA5-2510-A	SR-1525	BB-25EM	LR-25EM
25 x 11.25	5 Piece Tubeless Rim	1600-25	RA5-2511-A	SR-2025	BB-25EM	LR-25EM
25 x 13	5 Piece Tubeless Rim	1800-25	RA5-2513-A	SR-2525	BB-25EM	LR-25EM
25 x 14	5 Piece Tubeless Rim	17.5R25	RA5-2514-A	SR-1525	BB-25EM	LR-25EM
25 x 15	5 Piece Tubeless Rim	2100-25	RA5-2515-A	SR-3025	BB-25EM	LR-25EM
33 x 13	5 Piece Tubeless Rim	1800-33	RA5-3313-A	SR-2533	BB-33EM	LR-33EM
33 x 15	5 Piece Tubeless Rim	1800-33	RA5-3315-A	SR-3033	BB-33EM	LR-33W/EV
35 x 15	5 Piece Tubeless Rim	2100-35	RA5-3515-A	SR-3035	BB-35EM	LR-35EM
35 x 17	5 Piece Tubeless Rim	2400-35	RA5-3517-A	SR-3535	BB-35EM	LR-35W/EV
49 x 13	5 Piece Tubeless Rim	18.00-49	RA5-4913-A	SR-3049	BB-49W/EV	LR-49W/EV
49 x 17	5 Piece Tubeless Rim	2400-49	RA5-4917-A	SR-3549	BB-49W/EV	LR-49W/EV
49 x 19	5 Piece Tubeless Rim	2700-49	RA5-4919-A	SR-4049	BB-49W/EV	LR-49W/EV
49 x 22	5 Piece Tubeless Rim	31.80R49	RA5-4922-A	SR-3549	BB-49HD	LR-49HD
51 x 22	5 Piece Tubeless Rim	30.00R51	RA5-5122-A	SR-5051	BB-51HD	LR-51HD
51 x 24	5 Piece Tubeless Rim	30.00R51	RA5-5124-A	SR-5051	BB-51HD	LR-51HD
51 x 26	5 Piece Tubeless Rim	36.00R51	RA5-5126-A	SR-5051	BB-51HD	LR-51HD
57 x 29	5 Piece Tubeless Rim	37.00R57 40.00R57 46/90R57	RA5-5729-A	SR-6057	BB-57HD	LR-57HD
57 x 32	5 Piece Tubeless Rim	46/90R57	RA5-5732-A	SR-6057	BB-57HD	LR-57HD

FTF Series Forged Tapered Flange 5-Piece Tubeless Wheels

Size	Description	Tire Size	Part #	SR	BB	LR
33 x 27	5 Piece Tubeless Wheel	33.5-33	WA5-3327-A	SR-3533FTF	BB-33EM	LR-33FTF
35 x 15	5 Piece Tubeless Wheel	2100-35	WA5-3515-A	SR-3035FTF	BB-35	LR-35FTF
35 x 17	5 Piece Tubeless Wheel	2400-35	WA5-3517-A	SR-3535FTF	BB-35	LR-35FTF
35 x 28	5 Piece Tubeless Wheel	33.5-35	WA5-3528-A	SR-3535FTF	BB-35	LR-35FTF
39 x 32	5 Piece Tubeless Wheel	37.5-39	WA5-3932-A	SR-3539FTF	BB-39	LR-39FTF
45 x 36	5 Piece Tubeless Wheel	45/65-45	WA5-4536-A	SR-4545FTF	BB-45	LR-45FTF
49 x 17	5 Piece Tubeless Wheel	2400-49	WA5-4917-A	SR-3549FTF	BB-49	LR-49FTF
49 x 19	5 Piece Tubeless Wheel	2700-49	WA5-4919-A	SR-4049FTF	BB-49	LR-49FTF
49 x 22	5 Piece Tubeless Wheel	31.80R49	WA5-4922-A	SR-3549FTF	BB-49	LR-49FTF
51 x 24	5 Piece Tubeless Wheel	33.00R51	WA5-5124-A	SR-5051FTF	BB-51HD	LR-51FTF
51 x 26	5 Piece Tubeless Wheel	36.00R51	WA5-5126-A	SR-5051FTF	BB-51HD	LR-51FTF
57 x 29	5 Piece Tubeless Wheel	37.00R57 40.00R57 46/90R57	WA5-5729-A	SR-6057FTF	BB-57HD	LR-57FTF
57 x 32	5 Piece Tubeless Wheel	46/90R57	WA5-5732-A	SR-6057FTF	BB-57HD	LR-57FTF
57 x 36	5 Piece Tubeless Wheel	50/80R57	WA5-5736-A	SR-6057FTF	BB-57HD	LR-57FTF
57 x 44	5 Piece Tubeless Wheel	55/80R57	WA5-5744-A	SR-5057FTF	BB-57HD	LR-57FTF
57 x 47	5 Piece Tubeless Wheel	70/70-57	WA5-5747-A	SR-5057FTF	BB-57HD	LR-57FTF
63 x 36	5 Piece Tubeless Wheel		WA5-6336-A	SR-5063FTF	BB-63FTF	LR-63FTF
63 x 41	5 Piece Tubeless Wheel	70/70-57	WA5-6341-A	SR-5063FTF	BB-63FTF	LR-63FTF
63 x 44	5 Piece Tubeless Wheel	59/80R63	WA5-6344-A	SR-5063FTF	BB-63FTF	LR-63FTF

Investing in Global's Custom Machined Wheels and Rims will bring dividends in SAFETY & INCREASED TIRE & WHEEL LIFE on all your applications.

FTF Series Forged Tapered Flange 5-Piece Tubeless Rims

Size	Description	Tire Size	Part #	SR	BB	LR
49 x 19	5 Piece Tubeless Rim	2700-49	RA5-4919-A	SR-4049	BB-49FTB	LR-49FTF
49 x 22	5 Piece Tubeless Rim	31.80R49	RA5-4922-A	SR-3549	BB-49FTB	LR-49FTF
51 x 22	5 Piece Tubeless Rim	30.00R51	RA5-5122-A	SR-5051	BB-51FTB	LR-51FTF
51 x 24	5 Piece Tubeless Rim	33.00R51	RA5-5124-A	SR-5051	BB-51FTB	LR-51FTF
51 x 26	5 Piece Tubeless Rim	36.00R51	RA5-5126-A	SR-5051	BB-51FTB	LR-51FTF
57 x 29	5 Piece Tubeless Rim	37.00R57 40.00R57 46/90R57	RA5-5729-A	SR-6057	BB-57FTB	LR-57FTF
57 x 32	5 Piece Tubeless Rim	46/90R57	RA5-5732-A	SR-6057	BB-57FTB	LR-57FTF
63 x 36	5 Piece Tubeless Rim	53/80R63	RA5-6336-A	SR-5063	BB-63FTF	LR-63FTF

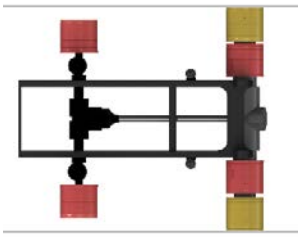

6 PC
Wheel Positions
(RED)

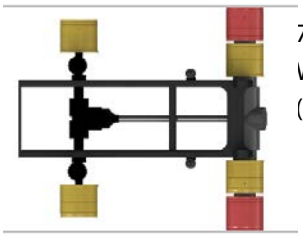

7 PC
Wheel Positions
(RED)

FTF SPEEDY Rim 6-Piece Inner & Front Positions and 7-Piece Outer Rim Position

Size	Description	Tire Size	Part #	SR	BB	LR
49 x 19	6 Piece Tubeless Rim 7 Piece Tubeless Rim	2700-49	RA6-4919-A RA7-4919-A	SR-4049FTF	BB-49FTB	LR-49FTFS
51 x 24	6 Piece Tubeless Rim 7 Piece Tubeless Rim	33.00R51	RA6-5124-A RA7-5124-A	SR-5051FTF	BB-51FTB	LR-51FTFS
51 x 26	6 Piece Tubeless Rim 7 Piece Tubeless Rim	36.00R51	RA6-5126-A RA7-5126-A	SR-5051FTF	BB-51FTB	LR-51FTFS
57 x 29	6 Piece Tubeless Rim 7 Piece Tubeless Rim	37.00R57 40.00R57 46/90R57	RA6-5729-A RA7-5729-A	SR-6057FTF	BB-57FTB	LR-57FTFS
57 x 32	6 Piece Tubeless Rim 7 Piece Tubeless Rim	46/90R57	RA6-5732-A RA7-5732-A	SR-6057FTF	BB-57FTB	LR-57FTFS
63 x 36	6 Piece Tubeless Rim 7 Piece Tubeless Rim	53/80R63	RA6-6336-A RA7-6336-A	SR-5063FTF	BB-63FTB	LR-63FTFS

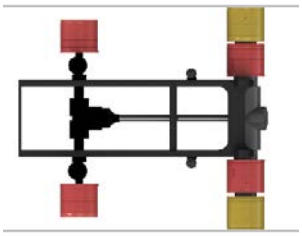

6 PC
Wheel Positions
(RED)

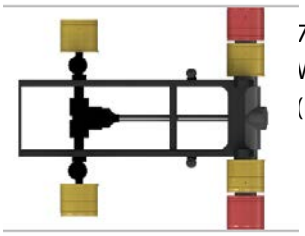

7 PC
Wheel Positions
(RED)

FTF SPEEDY Wheels 6-Piece Inner & Front Positions and 7-Piece Outer Wheel Positions

Size	Description	Tire Size	Part #	SR	BB	LR
45 x 36	6 Piece Tubeless Wheel 7 Piece Tubeless Wheel	45/65R45	WA6-4536-A WA7-4536-A	SR-4545FTF	BB-45	LR-45FTFS
49 x 19	6 Piece Tubeless Wheel 7 Piece Tubeless Wheel	2700R49	WA6-4919-A WA7-4919-A	SR-4049FTF	BB-49	LR-49FTFS
51 x 24	6 Piece Tubeless Wheel 7 Piece Tubeless Wheel	33.00R51	WA6-5124-A WA7-5124-A	SR-5051FTF	BB-51HD	LR-51FTFS
51 x 26	6 Piece Tubeless Wheel 7 Piece Tubeless Wheel	36.00R51	WA6-5126-A WA7-5126-A	SR-5051FTF	BB-51HD	LR-51FTFS
57 x 29	6 Piece Tubeless Wheel 7 Piece Tubeless Wheel	37.00R57 40.00R57 46/90R57	WA6-5729-A WA7-5729-A	SR-6057FTF	BB-57HD	LR-57FTFS
57 x 32	6 Piece Tubeless Wheel 7 Piece Tubeless Wheel	46/90R57	WA6-5732-A WA7-5732-A	SR-6057FTF	BB-57HD	LR-57FTFS
57 x 36	6 Piece Tubeless Wheel 7 Piece Tubeless Wheel		WA6-5736-A WA7-5736-A	SR-6057FTF	BB-57HD	LR-57FTFS
57 x 44	6 Piece Tubeless Wheel 7 Piece Tubeless Whee		WA6-5744-A WA7-5744-A	SR-6057FTF	BB-57HD	LR-57FTFS
57 x 47	6 Piece Tubeless Wheel 7 Piece Tubeless Wheel	70/70R57	WA6-5747-A WA7-5747-A	SR-6057FTF	BB-57HD	LR-57FTFS
63 x 36	6 Piece Tubeless Wheel 7 Piece Tubeless Wheel	53/80R63	WA6-6336-A WA7-6336-A	SR-5063FTF	BB-63HD	LR-63FTFS
63 x 41	6 Piece Tubeless Wheel 7 Piece Tubeless Wheel	59/80R63	WA6-6341-A WA7-6341-A	SR-5063FTF	BB-63HD	LR-63FTFS
63 x 44	6 Piece Tubeless Wheel 7 Piece Tubeless Wheel	59/80R63	WA6-6344-A WA7-6344-A	SR-5063FTF	BB-63EM	LR-63FTFS

Investing in Global's Custom Machined Wheels and Rims will bring dividends in SAFETY & INCREASED TIRE & WHEEL LIFE on all your applications.

Rim Stand

The rim stand makes it safe and very easy to correctly mount Tires on a multi piece wheel or rim. It lifts the wheel off the ground ensuring that no foreign material is caught up from the ground between the flanges or under the beads of the tire.

The back bead of the tire and flange seats into position easily and the bead seat band falls down into place making it far easier to install the O-Ring seal correctly and safely in place with little effort, keeping fingers safe.

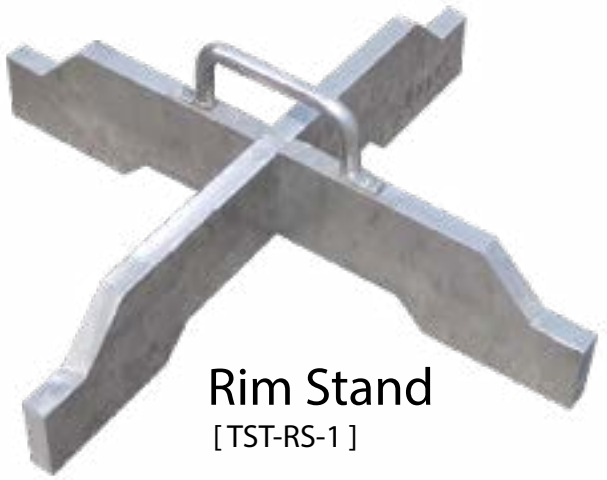

Rim Stand
[TST-RS-1]

Many tire failures are caused by incorrect mounting of the tire onto the wheel.
Safe, easy and clean tire mounting to get the full advantage of tire service life!

Tire Evacuator

Simply place evacuator in the tire casing, connect airline and open the valve!
Wheel corrosion is a major concern for tire service and tire life. When a tire is mounted without the water being removed the wheels become very corroded making it difficult to demount. The corrosion will cause air loss and premature tire failure and plenty of down time when a tire is remounted to a corroded wheel or bead seat band.

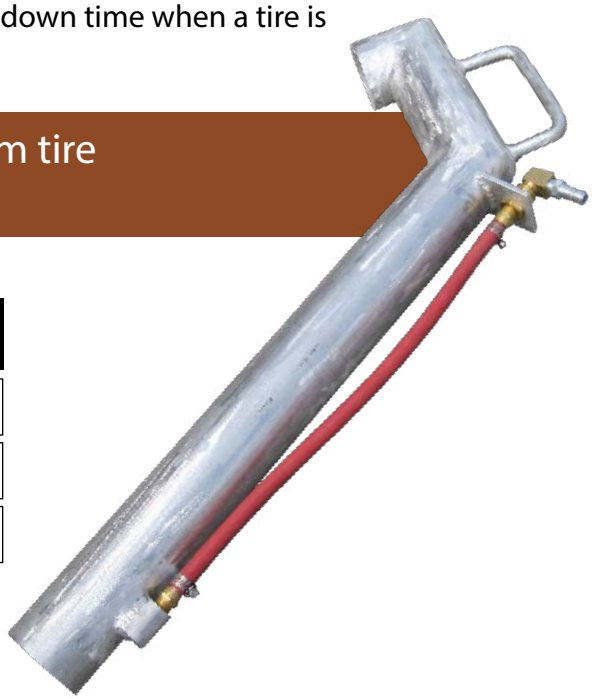

Remove rain water, fluids and foreign material from tire casings safely and easily in just seconds.

Part No.	Description
TST-TEVAC-1	Tire Evacuator, Aluminum, 49" thru 63" Tires
TST-TEVAC-2	Tire Evacuator, Aluminum, 35" thru 51" Tires
TST-TEVAC-3	Tire Evacuator, Aluminum, 24" thru 39" Tires

GAU-10033

High Accuracy Test Gauge

- 0 – 200 psi range, accurate to within ¼% full scale.
- Certified Test Gauge with individual serial number controlled
- Certificates sent with every gauge.
- 1 psi dial increments with index numbering to make reading pressure easy and accurate.
- Can be field calibrated on dial face.
- Knife-Edge indicator needle allows easy, highly accurate readout.
- 4-1/2" Diameter Face.
- ¼" NPT Lower Mount.

Tire Gauges

GAU-10005
Upside Down Face

GAU-10006
Standard Face

Two Unique Styles Same Great Features!

- Tire Pressure Gauge 0-160 PSI with Red Line at 135 PSI
- Anti-Contaminant Internal Protective Rubber Boot (protects internal components, stays accurate)
- Push Button Air Release
- Easy to Read Glow in Dark Face
- Quality Construction
- Accuracy +/- 1% of Full Scale
- Pressure Stop Release
- Easy Grip Hose and Handle

- 0-200 PSI
- Large Easy to Read Face
- Fully-Filled Liquid Gauge
- 1/4" Lower Mount
- Quality Construction
- Very Accurate for use as Shop Pressure Master Gauge

Master Gauge
GAU-10000

- 0-110 PSI with Red Line at 90 PSI
- Anti-Contaminant Internal Protective Rubber Boot
- Fully-Filled Liquid Gauge
- 1/4" Lower Mount
- Quality Construction
- Accuracy +/- 1% of Full Scale
- Easy to Read Glow in Dark Face

Tool Gauge
GAU-10003

Pressure Temperature (PT) Gauge

Identify Tire Problems Early And Save The Tire!
Increase Tire Life And Reduce Costly Down Time!

Specifically designed and developed as a simple, reliable and fast reading Tire Pressure and Temperature Tool. The Temperature Gauge is constructed of a special material which minimizes temperature transfer for an accurate tire temperature reading. The Tire Gauge is protected by a rubber boot which eliminates contaminants, clogging and accuracy issues.

Part No.	Description
GAU-10016	Lock-on Chuck - psi
GAU-10017	Lock-on Chuck - kpa
GAU-10020	Whip hose w/ Lock-on Chuck - psi
GAU-10021	Whip hose w/ Lock-on Chuck - kpa

TIRE GAUGE FEATURES:

- Red Line Indication for Over-Pressure
- Protective Rubber Boot
- Lever Air Release
- Easy to Read Glow in Dark Face
- Quality Construction
- Accuracy +/- 1% of Full Scale

PRESSURE TEMPERATURE GAUGE FEATURES:

- Light weight Quality Construction
- Special Material allows for Limited transfer of outside temperature.
- Accurate contaminant resistant Gauge
- Easy to read Temperature and Pressure Gauges
- Temperature problem reads quickly
- Easy to use

Valve Assembly Tool

SAFE and EASY ASSEMBLY of ALL OTR VALVE SIZES
- Super Large Bore thru Mega/Super Giant.
- Quick and easy setup between valve sizes

[HT-10005]

Easy Setup and Operation
- Supply shop air and tool is ready to use.
- Simple to operate with pendant control.

Ensures a trouble free solid connection for all valve stem connections.
- Easier and safer to use, no wrenches - one hand operation.
- Eliminates operator error, hydraulic power does the work.
- Easy reset between valves, makes quality valves quickly.

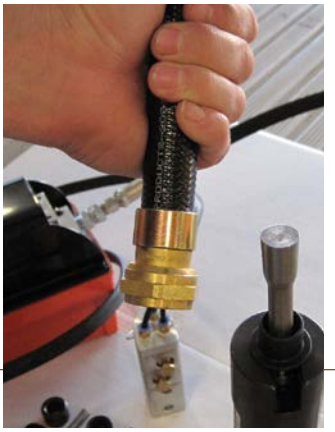

No More faulty valve connections

No More frustration with looking for a third hand during valve assembly!

SIMPLE, SOLID & TROUBLE FREE VALVE ASSEMBLY!

Global Mining Products Inc | Ph: 877.576.2855 | Fax: 877.576.2854

Rapid Inflation / Deflation Quick Connector

[TSE-ADS19.FFGKIT]

SAVE ON DOWN TIME WITH RAPID INFLATION AND DEFLATION

QUICK CONNECTOR FOR RAPID INFLATION / DEFLATION

Full 19mm ID for rapid Air Flow, with Built in Safety mechanism to ensure air is cut before disconnecting.

SAFE LARGE DIAMETER QUICK COUPLER FOR RAPID OTR TIRE INFLATION/DEFLATION

Super Giant Bore and Mega Bore Valve Hardware is definitely the way to go on Larger OTR equipment

- Speeds up inflation and deflation
- Tire Beads move up the 5-degree taper faster to assist proper bead position
- Rapidly deflate to operating pressure.

INCORRECT MOUNTING OF TIRES IS ONE OF THE LARGEST CAUSES OF PREMATURE TIRE FAILURE!

Rapid Deflation Unit

[TSE-10012]

Wheel Attaching Parts

Global Mining Products provides top quality wheel attaching studs, nuts, clamps and washers.

- Rolled threads
- Grade 8 or better
- Custom products available

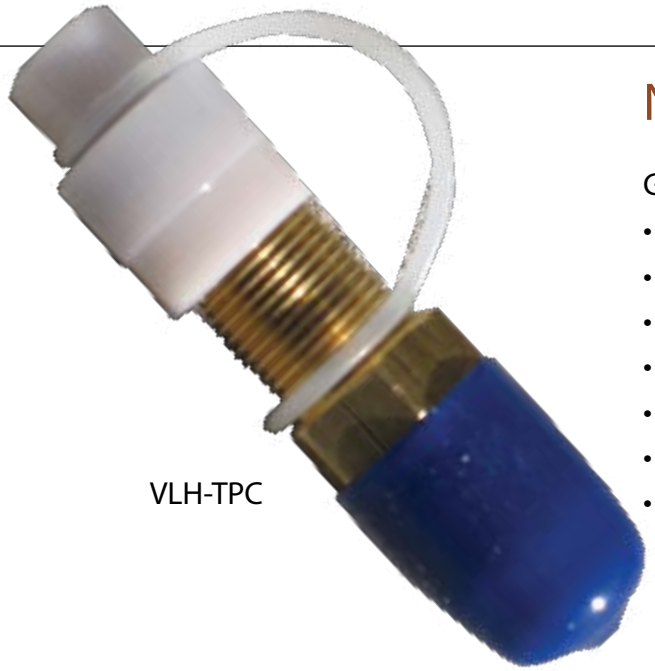

VLH-TPC

Non-Metallic Valve Caps

Global Mining Products OTR Thermoplastic Valve Caps

- Use in place of brass caps on all common OTR valves.
- Manufactured from High Strength Thermoplastic.
- Internal rubber gasket ensures tight air seal.
- Retaining clip ensures the cap stays in place during air checks.
- Reduces cost – no more stolen brass caps.
- Reduced weight when compared to brass caps.
- Hex top allows easy removal with a 3/8" wrench, just like existing brass caps.

Thread Gauges

IDENTIFY DAMAGED OR STRETCHED STUDS QUICKLY AND EASY

- Manufactured from stainless steel with laser precision.
- Allows quick visual check to verify wheel stud thread condition.
- Allows quick visual check for damaged worn or stretched stud threads.
- Small size allows you to keep them at hand for quick and easy use.
- Set will suit almost all Industrial commercial and OTR wheel studs

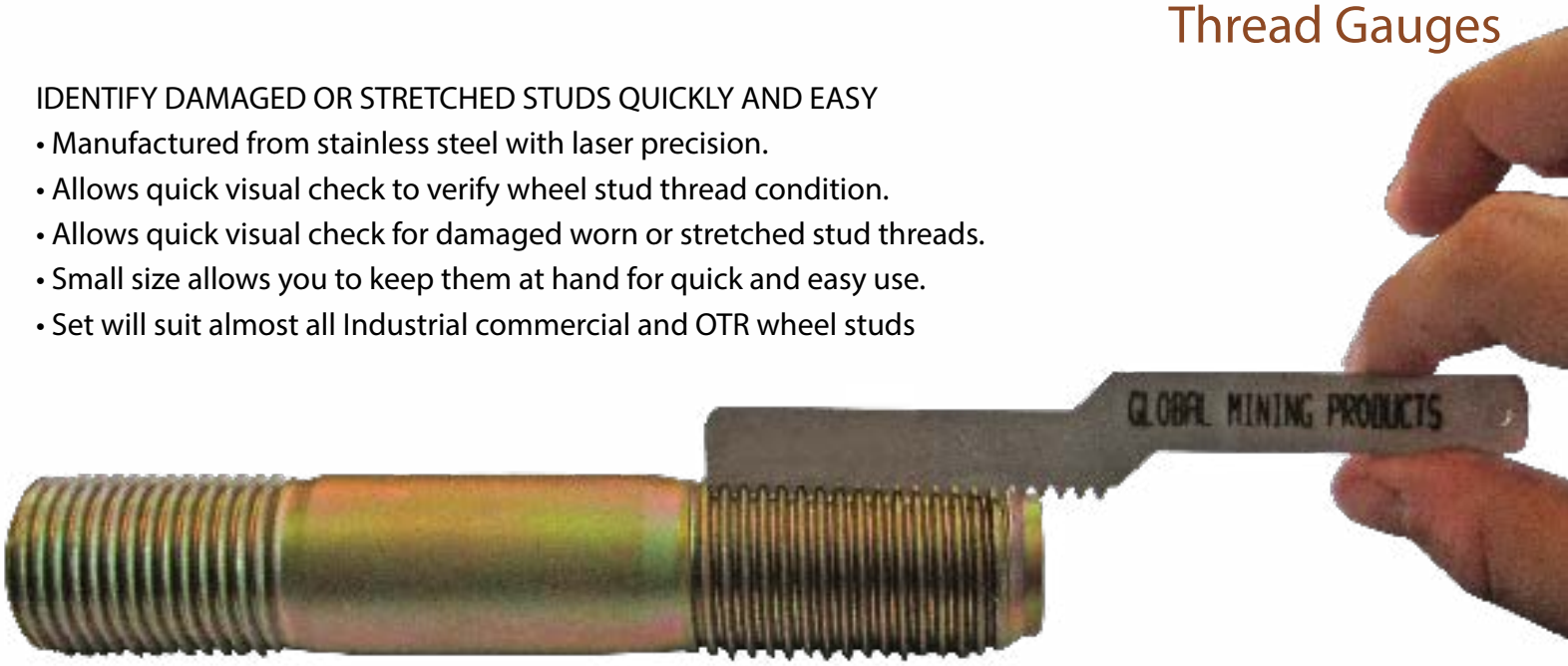

TST-10010 - OTR Stud Thread Test Gauge Set

Off-Road Axles

Global Mining Products Off-highway axles are available from 20,000 lb to 65,000 lb capacities. Our axles are manufactured from quenched and tempered alloy steel. This material and heat treatment provide very high impact properties in extreme cold weather.

The following 10 stud, 13 3/16 inch bolt circle (335mm) systems are available:

- Conventional Budd (15/16" Dia. Inner Stud)
- Also Special Budd (1 5/16" Dia. Inner Stud, Single Nut)
- Hub Pilot Metric (22mm Dia. Stud)
- Hub Pilot Metric (24mm Dia. Stud)
- Also Hub Pilot (1 1/8" Dia. Stud)

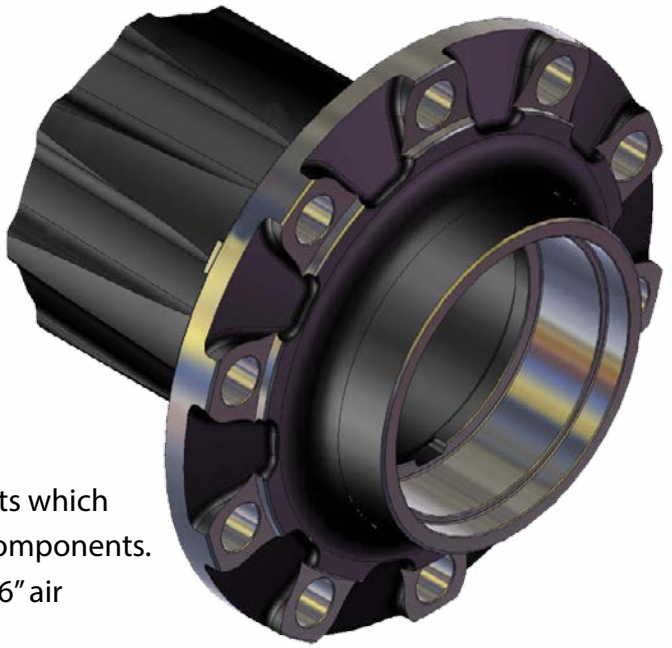

The axles are equipped with the customer's choice of brakes:

- 16 ½" x 7"
- 18" x 7"
- 20" x 8"

Global Mining Products also supplies Off-Highway axle parts which include heavy duty bearings, hubs, studs, nuts and other components. Including the 20" x 7" and 20" x 8" brakes, spiders, 30" and 36" air chambers, spring brakes and other related hardware.

Self-Steer Axles

Global Mining Products Self-Steer axles are built in capacities ranging from 20,000 lb to 65,000 lb. The design of our axle is based on standard North American practices. This allows simple rebuild and common parts availability. Spindle ends and knuckles are machined from quenched and tempered alloy steel castings. The material selection and heat treatment process used provides the highest impact values in the industry.

- Track widths are available up to 200 inches.
- Available in configurations suitable for both single and dual tire applications.
- Drop center beams are available.
- Damper systems are air, or dual spring shock.
- Many assembly configurations are available to fit most suspensions.
- Steer angles are adjustable from 15° to 30°.

Brake sizes are available in:

- 12 ¼″ x 7 ½″
- 15″ x 8 5/8″
- 16 ½″ x 7″
- 18″ x 7″

The model AXL-10002 axle has optional components specially designed to accommodate 12 ¼″ x 7 ½″ brakes. This is a 25,000 lb structural design using the small brake and drum. This axle will accept 15 inch, and 17 ½ inch wheels.

Tire & Tube and TLC

Global Mining's Tire and Tube Mounting Compound is designed to assist in mounting rubber tires and tubes on all types of wheels. It is fortified with rust inhibitors to provide protection against corrosion of the wheels. This mild formula is worker friendly. Thick vegetable based, jelly-like lubricant.
Use in its concentrated form or dilute in water(4 parts water, 1 part lube).

- Environmentally friendly
- Non-toxic, biodegradable
- Totally safe for all tires
- Made from natural, renewable resources
- Economical when diluted
- No petroleum oils of any kind
- Ultra thick concentrate for excellent performance when packing beads

SRV-2008

SRV-TLC-275

TLC Benefits:

- TLC prevents rust and will reduce rust over the life of your wheels
- Provides tire operators a faster, easier and more efficient way to dismount large OTR tires - reduces downtime
- Environmentally friendly, non-toxic, non-flammable and non-hazardous
- Reduces tire pressure loss by preventing cracking and keeping seals lubricated
- Keeps tires cool by dispersing heat - extending tire life

GLOBAL MINING PRODUCTS

Quality, Service, Value

RAD Pneumatic Torque Tools

RAD® torque wrenches are planetary gear reduction torque multipliers designed to deliver the most powerful, accurate and safe torque load of any torque multiplier on the market today. The RAD® product line incorporates patented planetary gear reduction drive systems to produce the highest power to weight ratio of any pneumatic controlled bolting system capable of achieving torque values from 25 ft.lbs and up to 8500 ft.lbs and an accuracy between 3-5%.

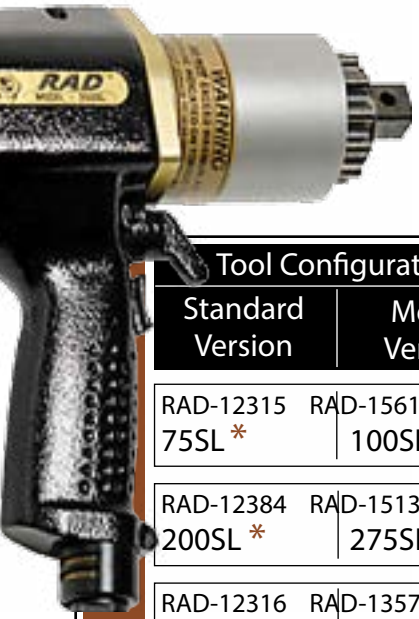

RAD Classic Pneumatic Series Torque Tools

RAD® pneumatic torque wrenches offer a reliable and dependable solution for the installation and removal of heavy-duty fasteners in a variety of industries that require accuracy, power, and safety.

Tool Configuration		Drive Size	Torque (low - high)		RPM	Weight		Noise Level
Standard Version	Metric Version		Standard Tool ft.lbs	Metric Tool Nm		lbs	kgs	
RAD-12315 75SL *	RAD-15616 100SL *	0.75 in.	25-75	35-100	275	5.5	2.5	80 db
RAD-12384 200SL *	RAD-15134 275SL *	0.75 in.	40-200	55-275	90	6.0	3.0	80 db
RAD-12316 350SL	RAD-13573 475SL	0.75 in.	50-350	70-475	65	6	2.7	80 db
RAD-12342 1800NG	RAD-13559 2400NG	1.0 in.	500-1800	700-2450	13	12.5	5.6	85 db
RAD-12357 50	RAD-13577 6800	1.5 in.	1500-5000	2000-6800	8	28	12.7	85 db

RAD Classic Pneumatic Series

DIMENSIONS

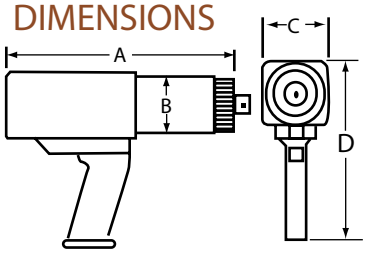

75SL	100SL	A=6.3″	B=2.4″	C=2.75″	D=8.75″
200SL	275SL	A=6.6″	B=2.4″	C=2.75″	D=8.75″
350SL	475SL	A=6.6″	B=2.4″	C=2.75″	D=8.75″
1800NG	2400NG	A=9.0″	B=3.0″	C=3.3″	D=9.5″
50	6800	A=13.9″	B=4.0″	C=3.7″	D=10.4″

* Also Available in 0.5 in. Drive Size

Unmatched accuracy through precision engineering & design

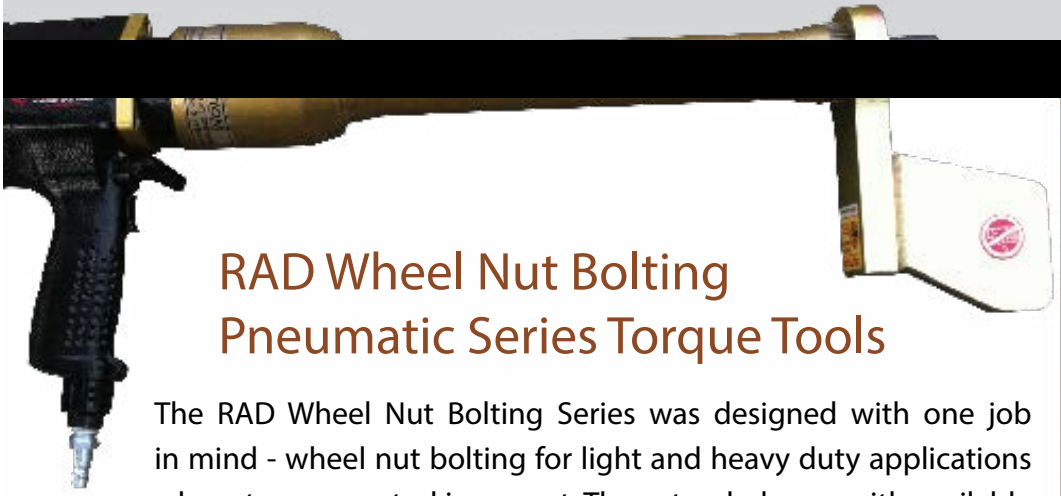

RAD Wheel Nut Bolting Pneumatic Series Torque Tools

The RAD Wheel Nut Bolting Series was designed with one job in mind - wheel nut bolting for light and heavy duty applications where torque control is a must. The extended nose with available custom reaction arms make these tools ideal for reaching wheel nut studs that are recessed where tool clearance is a problem.

10GX-NX Kit

RAD Wheel Nut Bolting Pneumatic Series

Tool Configuration		Drive Size	Torque (low - high)		RPM	Weight		Noise Level
Standard Version	Metric Version		Standard Tool ft.lbs	Metric Tool Nm		lbs	kgs	
RAD-13495 7GX-R	RAD-13541 10GX-R	0.75 in.	150-700	200-950	115	12.0	5.4	80 db
RAD-20808 15NDX-R	RAD-20809 20NDX-R	1.0 in.	300-1500	400-2000	10	20.0	9.0	85 db
RAD-19339 15DX-NX	RAD-19340 20DX-NX	1.0 in.	300-1500	400-2000	10	8.6	4.0	85 db
RAD-13477 1800NGX-R	RAD-13563 2400NGX-R	1.0 in.	500-1800	700-2450	10	27.5	12.4	85 db
RAD-13691 10GX-NX Kit	RAD-14550 14GX-NX Kit	0.75 in.	200-1000	275-1350	20	8.0	3.6	80 db

DIMENSIONS

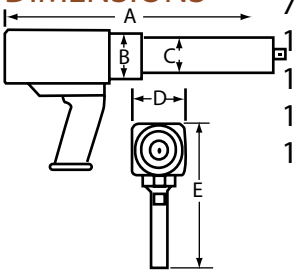

7GX-R	10GX-R	A=14.5″	B=2.5″	C=N/A	D=2.75″	E=9.0″
15NDX-R	20NDX-R	A=21.5″	B=2.5″	C=2.0″	D=3.0″	E=9.5″
15DX-NX	20DX-NX	A=8.0″	B=2.7″	C=2.75″	D=8.1″	E=N/A
1800NGX-R	2400NXG-R	A=21.5″	B=3.0″	C=2.0″	D=3.3″	E=9.5″
10GX-NX	14GX-NX	A=9.0″	B=2.5″	C=2.75″	D=9.0″	E=N/A

88 times less vibration than Impact wrenches... Operates at Only 85db

RAD® torque guns are one of the safest power tools on the market today. Our exclusive low profile reaction arm takes virtually all the operational load off the operator, reducing injuries and greatly reducing operating costs. Don't wait for a time loss injury or legislation to force change in your environment, RAD® guns set the standard in bolting safety.

RAD GenX Pneumatic Series Torque Tools

Precision design and engineering has brought about the next generation in torque wrenches The Gen-X Series. Designed for extreme duty on heavy duty applications in a variety of industries worldwide.

RAD GenX Pneumatic Series

Tool Configuration		Drive Size	Torque (low - high)		RPM	Weight		Noise Level
Standard Version	Metric Version		Standard Tool ft.lbs	Metric Tool Nm		lbs	kgs	
RAD-12814 7GX	RAD-13539 10GX	0.75 in.	100-700	150-950	30	8.0	3.6	80 db
RAD-12818 10GX	RAD-13549 14GX	0.75 in.	200-1000	275-1350	20	8.0	3.6	80 db
RAD-17328 15DX	RAD-19135 20DX	1.0 in.	300-1500	400-2000	10	8.6	3.9	80 db
RAD-12377 25GX	RAD-13565 34GX	1.0 in.	500-2500	700-3400	9	13.5	6.1	85 db
RAD-12356 34GX *	RAD-13571 46GX *	1.0 in.	1000-3400	1400-4600	12	20.0	9.0	85 db
RAD-15328 60DX	RAD-15805 80DX	1.5 in.	2000-6000	2700-8000	6.6	27.6	12.5	85 db
RAD-12383 85GX	RAD-13547 115GX	1.5 in.	3000-8500	4100-11550	4.5	38.5	17.4	85 db

DIMENSIONS

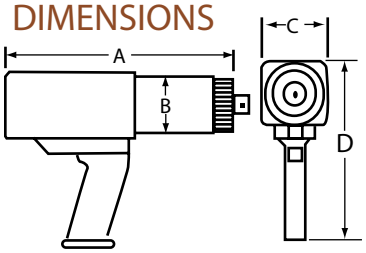

7GX	10GX	A=9.0″	B=2.5″	C=2.75″	D=9.0″
10GX	14GX	A=9.0″	B=2.5″	C=2.75″	D=9.0″
15DX	20DX	A=8.0″	B=2.7″	C=2.75″	D=8.1″
25GX	34GX	A=9.7″	B=3.05″	C=3.3″	D=9.5″
34GX	46GX	A=12.8″	B=3.4″	C=3.7″	D=10.4″
60DX	80DX	A=13.7″	B=4.0″	C=4.0″	D=10.9″
85GX	115GX	A=17.0″	B=4.75″	C=5.0″	D=11.0″

* Also Available in 1.5 in. Drive Size for Heavy Duty Applications

Accuracy of +/-5% Repeatability of +/-2%

RAD High Speed Pneumatic Series Torque Tools

The RAD® High Speed Series torque wrenches incorporate a precision engineered high speed gear box designed for faster run down on time sensitive bolting applications.

Introduced to compliment the RAD GX series torque wrenches, the high speed series offer the same reliable and dependable solution for the installation and removable of heavy-duty fasteners.

RAD High Speed Pneumatic Series

Tool Configuration		Drive Size	Torque (low - high)		RPM	Weight		Noise Level
Standard Version	Metric Version		Standard Tool ft.lbs	Metric Tool Nm		lbs	kgs	
RAD-10644 10GX-2	RAD-19774 14GX-2	0.75 in.	350-1000	450-1350	85	9.9	4.5	80 db
RAD-17068 15DX-2	RAD-19775 20DX-2	1.0 in.	500-1500	700-2000	50	10.5	4.75	80 db
RAD-19773 25GX-2	RAD-19776 34GX-2	1.0 in.	700-2500	950-3400	77	16.6	7.55	85 db

DIMENSIONS

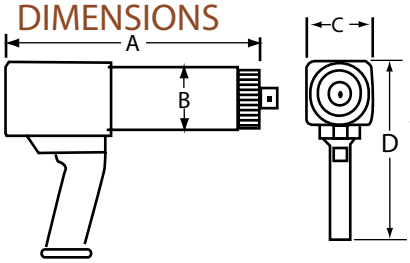

10GX-2	14GX-2	A=10.3″	B=2.5″	C=2.75″	D=8.1″
15DX-2	20DX-2	A=9.9″	B=2.7″	C=2.75″	D=8.1″
25GX-2	34GX-2	A=12.0″	B=3.1″	C=3.3″	D=10.0″

Highest Power-to-Weight ratio of any power tool

All RAD® torque guns are designed to deliver the highest power-to-weight ratio of any pneumatic tool on the market today, saving you time and money in maintenance or production costs. The extremely high torque and constant rotation make our tools ideal for virtually any bolting application you will encounter. Equal power in both forward and reverse allows more diversity for tough maintenance jobs.

RAD Transducer Verification (TV) Series

Introducing the all New RAD Transducer Verification (TV) Series. Pneumatic torque wrenches combined with strain gage technology provides the most accurate tool on the market. Ability to view and record every bolt cycle. Data collection allows you to easily upload data onto your computer, or view in real time with your tablet or smartphone via bluetooth technology.

- Pneumatic tools with a built in transducer.
- View data in real time on your tablet or smartphone via bluetooth technology.
- Strain Gage Technology, transducer accuracy of +/-1%.
- Data collection - record each torque cycle.

The Latest in Transducer Verification Bolting Solutions

RAD TV Pneumatic Series

Tool Configuration		Drive Size	Torque (low - high)		RPM	Weight		Noise Level
Standard Version	Metric Version		Standard Tool ft.lbs	Metric Tool Nm		lbs	kgs	
RAD-21953 7GX-R TV	RAD-22017 10GX-R TV	0.75 in.	300-700	400-950	30	12.0	5.4	80 db
RAD-22076 10GX-R TV	RAD-22079 14GX-R TV	0.75 in.	200-1000	275-1350	20	8.0	3.6	80 db
RAD-21357 34GX-R TV	RAD-22018 46GX-R TV	1.0 in.	1000-3400	1400-4600	12	20.0	9.0	85 db

DIMENSIONS

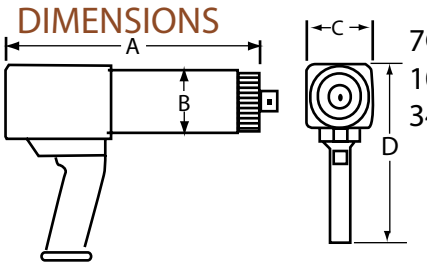

7GX-R TV	10GX-R TV	A=12.5″	B=2.5″	C=2.75″	D=9.0″
10GX-R TV	14GX-R TV	A=9.5″	B=2.5″	C=2.75″	D=8.07″
34GX-R TV	46GX-R TV	A=13.5″	B=3.4″	C=3.7″	D=10.5″

Portable Calibration System Capable Of Calibrating Between 55-2500 ft.lbs!

- User friendly interface
- Field calibration mode
- Data collection and bolt storage
- Unmistakeable pass or fail read outs
- Lithium-ion battery powered
- Directly upload data to a computer
- View real-time graph
- Selectable units of measurements: ft.lbs and Nm

RT Remote Transducers

Tool Configuration	Torque (low - high)		Drive Size	+/-
	Standard Tool ft.lbs	Metric Tool Nm		
RAD-18173 RAD RT 550SL ASSEMBLY	55-550	75-745	0.75 in	1%
RAD-18174 RAD RT 10GX ASSEMBLY	100-1000	135-1350	0.75 in	1%
RAD-18175 RAD RT 25GX ASSEMBLY	250-2500	340-3900	1.075 in	1%

Revolutionary Smart Socket

Battery Powered! Includes Netbook!

Torque Pass / Fail right on the socket!

RAD Electronic Torque Tools

RAD® Electronic Series (E-RAD) are the world's most advanced electronic pistol grip torque wrenches. They are designed to provide a high degree of accuracy and repeatability. Capable of data collection, angle measurement, accuracy of +/-3%, and torque values up to 6000 ft.lbs/ 8100 Nm, E-RAD Series offer an affordable solution for electronic bolting needs.

Data collection capability

All E Series tools come complete with data collection software allowing traceability of each torque sequence performed.

LED Green (Pass) or Red (Fail) indicator lights

Unmistakable visual signals indicates status of torque procedure for maximum accuracy and speed.

Push-button select torque

Fast and convenient error-free digital single increment torque settings.

Lightweight and ergonomic grip design

Advanced low-profile handle to reduce operator fatigue and increase productivity.

Extremely low noise level – only 75 db

World's quietest extreme torque gun, ideal for sensitive environments and standards.

NEW TOUCH SCREEN CONTROLLER
Dims:15" X 12"
Weight:15lbs

All E-RAD tools come fully calibrated with:

- E-RAD Torque Tool
- Controller Cables
- Operators Manual
- Reaction Arm & Retention Ring
- Digital Torque Controller
- E-RADCAL Calibration Software

The E RAD touch control case provides the interface for all E RAD Tools. The touch screen allows for quick adjustments and easily selectable pre-sets.

- Touch screen - 2" x 3"
- Standard with torque and angle
- Field calibration, password protected
- Life cycle and maintenance counters
- Advanced data collection

Also available in steel configuration

E-RAD Electronic Series

Tool Configuration		Drive Size	Torque (low - high)		RPM	Weight		Noise Level
Standard Version	Metric Version		Standard Tool ft.lbs	Metric Tool Nm		lbs	kgs	
RAD-14991 ERAD 700	RAD-14993 ERAD 950	0.75 in.	100-700	135-950	20	12.0	5.4	75 db
RAD-12313 ERAD 1200	RAD-13533 ERAD 1600	1.0 in.	200-1200	270-1600	16	15.0	6.8	75 db
RAD-12314 ERAD 2000	RAD-13535 ERAD 2700	1.0 in.	250-2000	340-2700	7	18.0	8.1	75 db
RAD-15710 ERAD 2500	RAD-15785 ERAD 3400	1.0 in.	250-2500	340-3400	5.5	18.0	8.1	75 db
RAD-12703 ERAD 3000	RAD-13537 ERAD 4000	1.0 in.	500-3000	675-4050	5.5	23.5	10.6	75 db
RAD-13992 ERAD 4000	RAD-12762 ERAD 5400	1.5 in.	800-4000	1080-5400	3.5	31.0	14.0	75 db
RAD-15952 ERAD 6000	RAD-15955 ERAD 8000	1.5 in.	1500-6000	2030-8100	4	29.0	13.0	70 db

DIMENSIONS

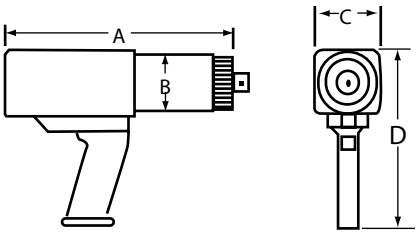

E-RAD 700 | 950 A=13.25 in. B=2.5 in. C=3.0 in. D=8.25in.
E-RAD 1200 | 1600 A=13.9 in. B=3.0 in. C=3.0 in. D=8.25 in.
E-RAD 2000 | 2000 A=14.33 in B=3.0 in. C=3.5 in. D=8.25 in.
E-RAD 2500 | 3400 A=14.8 in B=3.0 in. C=3.0 in. D=8.25 in.
E-RAD 3000 | 4000 A=16.75 in B=3.4 in. C=3.5 in. D=8.75 in.
E-RAD 4000 | 5400 A=17.75 in B=4.0 in. C=3.5 in. D=8.75 in.
E-RAD 6000 | 8000 A=16.5 in B=4.0 in. C=3.5 in. D=8.75 in.

SELECT ONE CABLE LENGTH & ONE CONTROLLER

Part #	Cable Length from Controller to Tool Model
RPT-10984	15ft Cable (Standard)
RPT-11845	20ft Cable
RPT-11846	25ft Cable

Part #	Controller Description	Length	Height	Width
RPT-17026	120 Volt Steel Assy	14.9	11.8	8.0
RPT-16499	120 Volt WeatherProof Assy	13.3	6.0	11.6
RPT-17027	220 Volt Steel Assy	14.9	11.8	8.0
RPT-16500	220 Volt WeatherProof Assy	13.3	6.0	11.6

E-RAD Blu Electronic Torque Tools

LIGHTER
Combining the latest advancements in ergonomic design along with an ultra-durable portable carry case, the E-RAD Blu Series torque system is a lightweigth alternative to other bolting systems.

FASTER
Compared to hydraulic wrenches, the E-RAD decreased tightening times by up to 300% through the delivery of smooth and continuous torque.

STRONGER
With unsurprassed power-to-weight ratio and our legendary patented gearbox design, E-RAD Series offers the highest dependability and reliability in the industry.

- Multiple Handles per Controller
- Joint Calibration via Bluetooth
- Accuracy of +/- 2.8% on Target
- Single Cable

Forward/Reverse Switch

Integrated Fan Kit

LED Lights located on both sides

The E-RAD Blu Series Touch Controllers provide the interface for all E-RAD Blu Tools. The E-RAD Blu Touch Controller allows the user to dial up and down, using the touch screen, in single digit increments to their desired torque. The E-RAD Blu series is bluetooth compatible which can be used in conjunction with a RAD Smart Socket for field and transducer verification. Please note the RAD Smart Socket is not included and must be ordered separately.

- Data Collection Capability
- Standard with Torque and Angle Sequence
- Field Calibration, Password Protection
- Life Cycle and Maintenance Counters

E-RAD Blu Electronic Series

Tool Configuration		Drive Size	Torque (low - high)		RPM	Weight		Noise Level
Standard Version	Metric Version		Standard Tool ft.lbs	Metric Tool Nm		lbs	kgs	
RAD-21980 ERAD 700	RAD-21985 ERAD 950	0.75 in.	100-700	135-950	20	12.0	5.4	75 db
RAD-21981 ERAD 2500	RAD-13533 ERAD 3400	1.0 in.	250-2500	340-3400	5.5	18.0	8.1	75 db
RAD-21982 ERAD 3000	RAD-21987 ERAD 4000	1.0 in.	500-3000	675-4050	5.5	23.5	10.6	75 db
RAD-21983 ERAD 6000	RAD-15785 ERAD 8000	1.5 in.	1500-6000	2030-8100	4	29.0	13	75 db

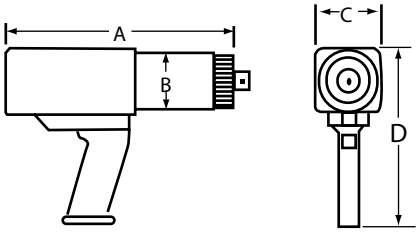

DIMENSIONS

E-RAD 700 | 950 A=13.25 in. B=2.5 in. C=3.0 in. D=8.25in.
E-RAD 2500 | 3400 A=14.8 in. B=3.0 in. C=3.0 in. D=8.25 in.
E-RAD 3000 | 4000 A=16.75 in B=3.4 in. C=3.5 in. D=8.75 in.
E-RAD 6000 | 8000 A=16.5 in B=4.0 in. C=3.5 in. D=8.75 in.

SELECT ONE CABLE LENGTH & ONE CONTROLLER

Part #	Cable Length from Controller to Tool Model
RPT-21217	15ft Cable (Standard)
RPT-21218	20ft Cable
RPT-21219	25ft Cable

Part #	Controller Description	Length	Height	Width
RPT-21221	120 Volt WeatherProof Assy	13.3	6.0	11.6
RPT-21220	220 Volt WeatherProof Assy	13.3	6.0	11.6

B-RAD Battery Powered Torque Tools

RAD Battery Series (B-RAD) torque wrenches offer unmatched power, versatility, and reliability. Incorporating precision engineered gear boxes, their lightweight design makes these tools ideal for any application, especially where compressed air or electricity is not readily available. The B-RAD Series are available in single speed and high speed models.

B-RAD Battery Powered Series

Tool Configuration		Drive Size	Torque (low - high)		RPM	Weight		Noise Level
Standard Version	Metric Version		Standard Tool ft.lbs	Metric Tool Nm		lbs	kgs	
RAD-20086 BRAD 500	RAD-20089 BRAD 675	0.75 in.	220-480	300-675	4.7	8.4	3.7	80 db
RAD-20092 BRAD 500-2	RAD-20095 BRAD 675-2	0.75 in.	200-500	300-675	28.9	10.4	4.5	80 db
RAD-20087 BRAD 1000	RAD-20090 BRAD 1350	0.75 in.	400-100	550-1350	2.7	8.8	4.0	80 db
RAD-20093 BRAD 1000-2	RAD-20096 BRAD 1350-2	0.75 in.	400-1000	550-1350	11.5	10.8	4.9	80 db
RAD-20088 BRAD 1500	RAD-20091 BRAD 2000	1.0 in.	600-1500	800-2000	1.8	9.2	4.2	80 db
RAD-20094 BRAD 1500-2	RAD-20097 BRAD 2000-2	1.0 in.	600-1500	800-2000	9.4	11.2	5.1	80 db

DIMENSIONS

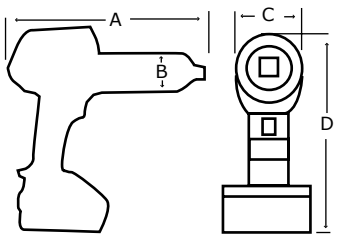

BRAD 500	675	A=10.07″	B=2.5″	C=2.5″	D=10.25″
BRAD 500-2	675-2	A=12.07″	B=2.5″	C=2.5″	D=10.25″
BRAD 1000	1350	A=10.65″	B=2.5″	C=2.5″	D=10.25″
BRAD 1000-2	1350-2	A=12.65″	B=2.5″	C=2.5″	D=10.25″
BRAD 1500	2000	A=10.83″	B=2.7″	C=2.7″	D=10.37″
BRAD 1500-2	2000-2	A=13.00″	B=2.7″	C=2.7″	D=10.37″

JUST IMAGINE THE FREEDOM...

No Air Lines! No Power Cords! No Hassles!

- 8 Pre-set settings
- Soft start trigger for safety
- 18 V Lithium Ion battery
- Dual scale reading: ft/lbs and nm
- Advanced Patented Gearbox
- Integrated calibration
- Accuracy of +/- 5 to 7%

DB-RAD Digital Battery Torque Tools

Introducing the RAD Digital Battery Series (DB-RAD) The new line of Digital B-RAD tools is the world's first digital, cordless, and lithium-ion torque wrench. With digital display and single increment torque settings. The color screen with keypad provides unmistakable visual LED indicator lights. Featuring integrated calibration, a lithium ion battery and a dual scale reading: ft.lbs and nm.

DB-RAD Digital Battery Series

Tool Configuration		Drive Size	Torque (low - high)		RPM	Weight		Noise Level
Standard Version	Metric Version		Standard Tool ft.lbs	Metric Tool Nm		lbs	kgs	
RAD-16821 DB-RAD-500	RAD-16830 DB-RAD-675	0.75 in.	100-500	135-675	26	11.0	5.0	80 db
RAD-16822 DB-RAD-1000	RAD-16831 DB-RAD-1350	0.75 in.	250-1000	350-1350	12	11.6	5.2	80 db
RAD-16823 DB-RAD-1500	RAD-16832 DB-RAD-2000	1.0 in.	500-1500	675-2000	8	11.8	5.3	80 db

DIMENSIONS

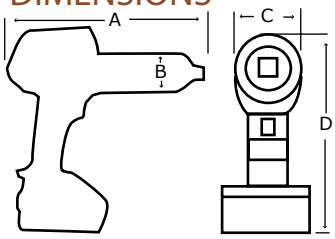

DBRAD 500 | 675	A=8.75″	B=2.4″	C=2.8″	D=10.5″
DBRAD 1000 | 1350	A=12.62″	B=2.5″	C=3.0″	D=10.5″
DBRAD 1500 | 2000	A=10.0″	B=2.5″	C=3.0″	D=10.3″

The World's First Digital and Programmable Torque Wrench

- Ideal for applications where compressed air or electricity is not readily available.
- Unmatched power, VERSATILITY, and reliability in a lightweight portable tool.
- Stall type tool capable of accuracy of +/-5%, and repeatability of +/-2%.
- Digital display with programmable preset torque values.
- Unmistakable LED Lights
- Individually Calibrated and Traceable

V-RAD Electric Powered Torque Tools

V-RAD Series are used for the installation or removal of heavy duty fasteners where accuracy, power, and safety are required.This series comes without the hassle of air hoses and simply runs when plugged into any electric power supply, including generators. Based on the design of a patented planetary gear reduction system, the V-RAD Series offers a smooth continuous flow of controlled torque which is adjustable through dial settings.

V-RAD Electric Series

Tool Configuration		Drive Size	Torque (low - high)		RPM	Weight		Noise Level
Standard Version	Metric Version		Standard Tool ft.lbs	Metric Tool Nm		lbs	kgs	
RAD-12899 VRAD 10	RAD-13583 VRAD 14	0.75 in.	300-1000	400-1350	9	11.0	4.9	80 db
RAD-13501 VRAD 23	RAD-13587 VRAD 31	1.0 in.	800-2300	1100-3100	4	15.6	7.1	80 db

DIMENSIONS

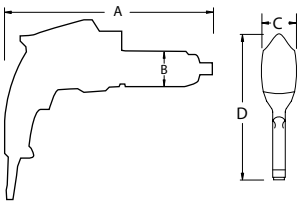

VRAD 10 | 14	A=18.0″	B=2.5″	C=3.0″	D=8.5″
VRAD 23 | 31	A=19.5″	B=3.0″	C=3.0″	D=8.5″

Maximum Versatility & Efficiency...

Fast, Accurate and User-friendly

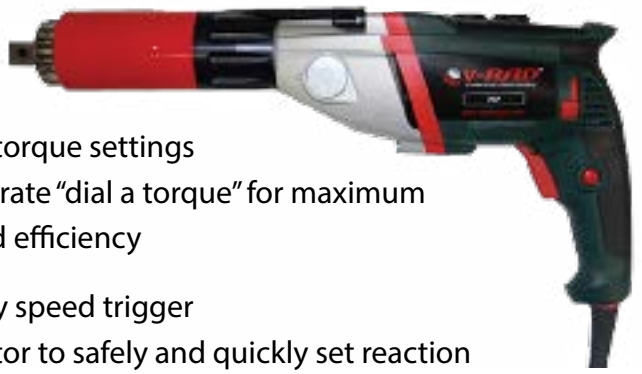

Quick adjust torque settings
Fast and accurate "dial a torque" for maximum versatility and efficiency

Soft-start vary speed trigger
Allows operator to safely and quickly set reaction arm before full torque is applied

Equal power in forward and reverse
Convenience and cost effective use of same tool for break away and final torque

Advanced ultra-durable electric motor
Extreme duty designed to reduce maintenance cost and increase reliability

DV-RAD Digital Electric Torque Tools

Extreme design innovation with colour screen and keypad for single increment digital torque setting. Ideal for applications where compressed air is not readily available. Smooth continuous flow of controlled torque adjustable presets.

Electric Powered

Fully programmable preset torque settings

DV-RAD Digital Electric Series

Tool Configuration		Drive Size	Torque (low - high)		RPM	Weight		Noise Level
Standard Version	Metric Version		Standard Tool ft.lbs	Metric Tool Nm		lbs	kgs	
RAD-16120 DV-RAD 1000	RAD-16123 DV-RAD 1400	0.75 in.	400-1000	550-1350	7.7	11.4	3.8	80 db
RAD-16121 DV-RAD 1500	RAD-16124 DV-RAD 2000	1.0 in.	600-1500	800-2000	5.8	12.0	4.0	80 db
RAD-16122 DV-RAD 2500	RAD-16125 DV-RAD 3400	1.0 in.	1000-2500	1350-3400	3.2	13.6	6.2	80 db

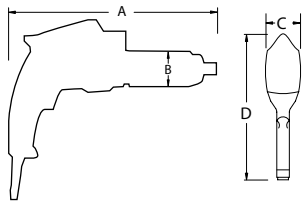

DIMENSIONS

DVRAD 1000 | 1400	A=12.66″	B=2.5″	C=2.75″	D=8.65″
DVRAD 1500 | 2000	A=13.5″	B=2.7″	C=2.75″	D=8.65″
DVRAD 2500 | 3400	A=14.95″	B=3.1″	C=2.75″	D=8.65″

- User friendly interface
- Field calibration mode
- Data collection and bolt storage
- Unmistakeable pass or fail read outs
- View real-time graph
- Selectable units of measurements: ft.lbs and Nm

RAD Torque Tool Reaction Arms

Global Mining offers a variety of reaction arms to ensure tools are achieving 100% of their performance.

Tool Models		Standard	Deep Socket	Double Ended	Blank	Double Ended Blank	Clip
Standard	Metric						
75SL	100SL	RAD-10686	RAD-10687	RAD-10688	RAD-10036	RAD-10037	RPT-10306
200SL	275SL	RAD-10686	RAD-10687	RAD-10688	RAD-10036	RAD-10037	RPT-10306
350SL	475SL	RAD-10686	RAD-10687	RAD-10688	RAD-10036	RAD-10037	RPT-10306
550SL	750SL	RAD-10686	RAD-10687	RAD-10688	RAD-10036	RAD-10037	RPT-10306
800NG	1100NG	RAD-10043	RAD-10458	RAD-10459	RAD-10044	RAD-10045	RPT-10038
1400NG	1900NG	RAD-10004	RAD-10007	RAD-10009	RAD-10005	RAD-10008	RPT-10014
1800NG	2400NG	RAD-10004	RAD-10007	RAD-10009	RAD-10005	RAD-10008	RPT-10014
30	4000	RAD-10022	RAD-10025	RAD-10027	RAD-10024	RAD-10026	RPT-10032
50	6800	RAD-10039	RAD-10401	RAD-10403	RAD-10040	RAD-10402	RPT-10032
7GX	10GX	RAD-13366	RAD-13367	RAD-13368	RAD-13364	RAD-13365	RPT-12733
10GX	14GX	RAD-13366	RAD-13367	RAD-13368	RAD-13364	RAD-13365	RPT-12733
15DX	20DX	RAD-17375	RAD-18480	RAD-19094	RAD-17888	RAD-19093	RPT-17367
25GX	34GX	RAD-18250	RAD-18251	RAD-10516	RAD-10513	RAD-10448	RPT-10509
34GX	46GX	RAD-11531	RAD-11534	RAD-11533	RAD-11530	RAD-11532	RPT-11350
60DX	80DX	RAD-15375	RAD-15788	RAD-15790	RAD-15373	RAD-15789	RPT-15367
85GX	115GX	RAD-12885	RAD-13508	RAD-13509	RAD-13505	RAD-13506	RPT-11930
1400NGX-R	1900NGX-R	RAD-13484	RAD-13515	RAD-13516	RAD-13513	RAD-13514	RPT-13476
1800NGX-R	2400NGX-R	RAD-13484	RAD-13515	RAD-13516	RAD-13513	RAD-13514	RPT-13476

CAST REACTION ARMS

NEW

ANNULUS HANDLE/HANGERS

Contact Global Mining Products for more information

Global Mining Products Inc | Ph: 877.576.2855 | Fax: 877.576.2854

RAD Torque Tool Reaction Arms

Tool Models		Standard	Deep Socket	Double Ended	Blank	Double Ended Blank	Clip
Standard	Metric						
BRAD 500	BRAD 675	RAD-13366	RAD-13367	RAD-13368	RAD-13364	RAD-13365	RPT-12733
BRAD 1000	BRAD 1350	RAD-13366	RAD-13367	RAD-13368	RAD-13364	RAD-13365	RPT-12733
BRAD 1500	BRAD 2000	RAD-17375	RAD-18480	RAD-19094	RAD-17888	RAD-19093	RPT-17367
DBRAD 500	DBRAD 675	RAD-14900	RAD-15923	RAD-15924	RAD-10036	RAD-10037	RPT-10306
DBRAD 1000	DBRAD 1350	RAD-13366	RAD-13367	RAD-13368	RAD-13364	RAD-13365	RPT-12733
DBRAD 1500	DBRAD 2000	RAD-17375	RAD-18480	RAD-19094	RAD-17888	RAD-19093	RPT-17367
ERAD 700	ERAD 950	RAD-11460	RAD-11461	RAD-11463	RAD-11459	RAD-11462	RPT-10306
ERAD 1200	ERAD 1600	RAD-10004	RAD-10007	RAD-10009	RAD-10005	RAD-10009	RPT-10014
ERAD 2000	ERAD 2700	RAD-10247	RAD-10395	RAD-10397	RAD-10394	RAD-10396	RPT-10038
ERAD 2500	ERAD 3400	RAD-18250	RAD-18251	RAD-10516	RAD-10513	RAD-10448	RPT-10509
ERAD 3000	ERAD 4000	RAD-11531	RAD-11534	RAD-11533	RAD-11530	RAD-11532	RPT-11350
ERAD 4000	ERAD 5400	RAD-10039	RAD-10401	RAD-10403	RAD-10040	RAD-10402	RPT-10032
ERAD 6000	ERAD 8000	RAD-12885	RAD-13508	RAD-13509	RAD-13505	RAD-13506	RPT-11930
VRAD 4	VRAD 6	RAD-10686	RAD-10687	RAD-10688	RAD-10036	RAD-10037	RPT-10306
VRAD 10	VRAD 14	RAD-13366	RAD-13367	RAD-13368	RAD-13364	RAD-13365	RPT-12733
VRAD 16	VRAD 21	RAD-10004	RAD-10007	RAD-10009	RAD-10005	RAD-10009	RPT-10014
VRAD 23	VRAD 31	RAD-18250	RAD-18251	RAD-10516	RAD-10513	RAD-10448	RPT-10509
DVRAD 1000	DVRAD 1350	RAD-13366	RAD-13367	RAD-13368	RAD-13364	RAD-13365	RPT-12733
DVRAD 1500	DVRAD 2000	RAD-17375	RAD-18480	RAD-19094	RAD-17888	RAD-19093	RPT-17367
DVRAD 2500	DVRAD 3400	RAD-18250	RAD-18251	RAD-10516	RAD-10513	RAD-10448	RPT-10509

***Please contact us if you have a specific or custom application.
Global Mining Products can design a solution to meet your needs.

RAD Torque Tool Nose Extensions

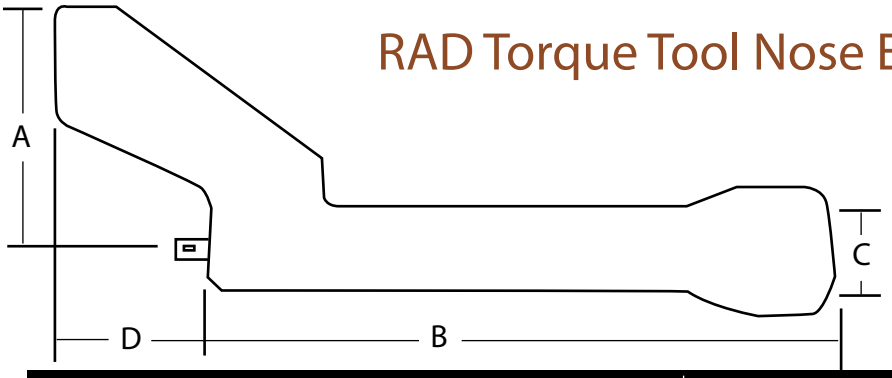

Part No.	Tool Models		Description	A	B	C	D
	Standard	Metric					
RAD-14195	10GX	14GX	12″ Nose Extension	N/A	12.75″	2.5″	N/A
RAD-14200	10GX	14GX	15″ Nose Extension	N/A	15.75″	2.5″	N/A
RAD-14205	10GX	14GX	18″ Nose Extension	N/A	18.75″	2.5″	N/A
RAD-10259	1800NG	2400NG	12″ Nose Extension	5″	12.7″	2″	3.5″
RAD-10257	1800NG	2400NG	15″ Nose Extension	5″	18″	2″	3.5″
RAD-10258	1800NG	2400NG	18″ Nose Extension	5″	18″	2″	3.5″
RAD-12087	30	4000	12″ Nose Extension	5″	12.8″	2″	3.25″
RAD-10734	30	4000	15″ Nose Extension	5″	15.8″	2″	3.25″
RAD-10734	30	4000	18″ Nose Extension	5″	18.8″	2″	3.25″
RAD-12096	25GX	34GX	12″ Nose Extension	5″	13″	2″	3.25″
RAD-12061	25GX	34GX	15″ Nose Extension	5″	16″	2″	3.25″
RAD-12097	25GX	34GX	18″ Nose Extension	5″	18.5″	2″	3.25″
RAD-11750	34GX	46GX	12″ Nose Extension	5.60″	15.5″	2″	3.38″
RAD-11751	34GX	46GX	15″ Nose Extension	5.60″	18.9″	2″	3.38″
RAD-11752	34GX	46GX	18″ Nose Extension	5.60″	21.9″	2″	3.38″

RAD SMART–SOCKET SERIES

Revolutionary Socket for Measuring Torque Directly on the Bolt

Instant Torque Read-Out on your live application!

View and Download Logs onto your Smartphone or Tablet.

Features

- Measures and displays peak torque
- "Pass" or "Fail" indication
- Ideal on site calibration tool
- Data logging – download logs onto computer

RAD Smart Sockets

Part No.	Model	Torque (low - high)	Drive Size	Weight (lbs)	Dimensions Heights	
SKT-20879	33mm Deep Smart Socket	150-1500	.75"	3.2	3.94	2.83
SKT-20880	46mm Smart Socket	150-1500	1.0"	2.65	3.42	2.83
SKT-20881	50mm Smart Socket	300-3000	1.0"	3.42	3.52	3.39
SKT-20882	55mm Smart Socket	300-3000	1.0"	3.2	3.52	3.39
SKT-20883	60mm Smart Socket	300-3000	1.0"	3.63	3.52	3.39
SKT-20885	80mm Smart Socket	800-8000	1.5"	8.7	4.75	4.53

**** Most Sockets sizes available upon request*****

Stand-Alone, Light Weight and Portable

Each Calibration Unit comes fully calibrated, traceable to NIST standards.

[CAL-OT-1000SP-RD]

A stand-alone, light weight, portable calibration stand specifically designed to work with the Commercial Torque Tool. It works with the unique double-paddle reaction arm supplied with the Commercial Tool, making torque verification quick and easy. The rundown fixture and transducer are fitted to accept the built in display, keeping everything you need in one tidy package.

[CAL-OT-3000SP-RD – 200 – 3000 ft/lbs]
[CAL-OT-5000SP-RD – 250 – 5000 ft/lbs]
[CAL-OT-6000SP-RD – 250 – 6000 ft/lbs]

Stand-alone, light weight, portable calibration stands designed to work with a variety of Torque Tools using the standard reaction arms supplied with the tools. With a range between 200 – 6000 ft/lbs these versatile units will support the calibration needs of a wide variety of Torque Tools, allowing quick checks in the field to verify tool accuracy. The reaction point is bolted in place, so custom reaction points can be designed for unique applications.

Calibration System

Digital Joint Simulating Torque Analyzers

[CAL-10785] A complete calibration system capable of calibrating between 100-1000 ft.lbs. System includes a static transducer, calibration stand, and all the necessary reaction arms for ALL series of RAD Torque Tools between 100-1000 ft.lbs

[CAL-10786] A complete calibration system capable of calibrating between 300-3000 ft.lbs. System includes a static transducer, calibration stand, and all the necessary reaction arms for ALL series of RAD Torque Tools between 300-3000 ft.lbs.

[CAL-10787] A complete calibration system capable of calibrating between 500-5000 ft.lbs. System includes a static transducer, calibration stand, and all the necessary reaction arms for ALL series of RAD Torque Tools between 500-5000 ft.lbs.

Each transducer comes fully calibrated traceable to NIST standards ensuring the highest measurement of quality.

Manual Torque Multipliers

MGX Series

Based on the extreme duty 'Gen-X Series' of RAD guns the New Manual Gen-X torque multiplier offers the perfect economical solution to controlled bolting applications.

Sharing the same unique 'serpentine' reaction output as the Gen-X Series, the New MGX is compatible with a huge range of reaction arms and nose extension options from the RAD Accessory range ensuring the ultimate in safety and repeatability.

With unmatched reliability delivered by one of the most advanced engineered gearboxes on the market the 'MGX' Series offers 'True' torque ratios of 4:1 and 20:1.

A heavy duty Anti Wind-up Ratchet is fitted to all 20:1 models as standard to ensure the safety of the operator and increase the versatility of the multiplier.

- The ultimate in power-to-weight ratio
- Torque accuracy +/- 4%
- Anti wind-up ratchet standard on 20:1 models
- True torque multiplication ratios
- Compatible with all RAD reaction arm and nose extension accessories

Manual Torque Multipliers

Part No	Tool Model	Input	Output	Ratio	AWUR	Torque Range	
						ft.lbs	Nm
RAD-MGX1041	10MGX	1/2"	3/4"	4:1	X	1000	1350
RAD-MGX1021	10MGX-2	1/2"	3/4"	20:1	√	1000	1350
RAD-MGX2041	20MGX	3/4"	1"	4:1	X	2000	2700
RAD-MGX2021	20MGX-2	1/2"	1"	20:1	√	2000	2700
RAD-MGX3441	34MGX	3/4"	1"	4:1	X	3400	4600
RAD-MGX3421	34MGX-2	1/2"	1"	20:1	√	3400	4600

Sockets

Global Mining Products offers a wide range of high quality impact sockets, thinwall sockets, extensions and related products. Everything from ½" drive to 1-1/2" drive, including #5 Spline, is available. Global Mining also provides Custom Sockets, so we can supply for all of your heavy duty applications.

RAD Torque Tool Service and Rebuilding Facilities

We Have Expanded Our Torque Tool Service and Rebuilding Facilities!
To service our customers better, Global Mining now has Torque Tool Rebuilding and Servicing Facilities located in USA, Indonesia and Canada. All facilities are run with experienced personnel and equipped to offer comprehensive torque tool inspections, repairs, rebuilds, testing and calibration.

Ensure Your Tools Are Running With Maximum Efficiency!
It is important to have shop tools operating at maximum efficiency and safety levels. Global Mining suggest Torque Tools are inspected annually to ensure proper torque is achieved. Each inspection includes an in-depth tool examination & recalibration, by one of our experienced technicians.

Quality, Service and Value Guaranteed.
All torque tool inspections include a complete disassembly, cleaning, lubrication and replacement of all vital bushings, pins, bearings, fasteners, packings and re-calibration to ensure a long and productive tool life. We are committed to providing quality repairs and service to meet all industry standards and specifications at competitive prices.

For Dependable, Accurate and Trouble Free Extended RAD Tool Life
Have your RAD Torque Tool annually calibrated and inspected by a certified technician. Please contact one of our three repair facilities below to book your annual maintenance inspection today!

USA
Global Mining Products Inc
400 Front Street
Elko, NV 89801
Ph: 775-778-3410

CANADA
Global Mining Products Inc
107-2567 192 Street
Surrey BC V3S3X1
Ph: 604-538-0058

INDONESIA
PT GloMinPro Indonesia
Kelurahan Graha Indah
Kecamatan Balikpapan Utara
East Kalimantan 76126
Ph: 6205.4287.4097

Preventative Maintenance Tips

For Dependable, Accurate & Trouble Free Extended RAD Tool Life

AIR MOTORS:

Air motors must be kept oiled and free of all contaminants (ex. water, dirt etc). 90% of all tools repaired are dirt and water contaminated. It is also important to inspect a tool prior to use to ensure clean and proper lubrication. Lack of or contaminated lubrication can cause loss of power [torque] resulting in costly down time and repairs.

NOTE:

Air Motors have internal tolerances of .001 thousandths of an inch, so it is important to note the following preventative maintenance:

- Drain air compressor DAILY.
- Keep hoses and all inlet air lines clean.
- Service and clean air regulator and filter DAILY.
- Top up automatic oiler, and check oil delivery setting to be sure the proper amount of oil is being delivered to air motor DAILY.

GEAR BOXES:

The major cause of early gearbox failures are:

- OVER TORQUING
- EXCESSIVE SIDE TORQUES
- WATER AND DIRT INCURSION

DO NOT exceed the recommended air pressure on the tools torque chart.
DO NOT bypass the regulator and automatic oiler to operate tool directly from the compressor.
If the tools torque chart is missing call Global Mining Products for a copy.
The reaction arm MUST be positioned so the blade at the top of offset shank is taking the load, this will prevent a [damaging tool] side load.
DO NOT drop tool in mud or water, as this will migrate into gear box, clean tool after use and store in a clean dry environment.
GLOBAL MINING RECOMMENDS ANNUAL PREVENTATIVE SERVICING OF RAD TOOLS
[This includes a complete disassembly, cleaning & inspection for wear or damage, replacement of bushings, bearings, pins, packings, lubrication and calibration].

IMPORTANT: DO NOT OPERATE TORQUE TOOL BEFORE READING OPERATING INSTRUCTIONS. IF DAMAGE OCCURS, DO NOT ATTEMPT TO OPERATE OR REPAIR, CONTACT GLOBAL MINING PRODUCTS IMMEDIATELY AT (877) 576-2855

RAD Rental Tool Program

The Global Mining Products RAD Torque Tool Rental Program is the answer for you when you need a RAD Torque Tool in a hurry for a short period of time. Our rental & repair facilities stock an extensive Tool and Accessory selection to suit all equipment and end-user needs. All rentals come fully calibrated, ready for use and are available for a daily or weekly rental period to suit your time and budget needs.

Along with our extensive tool selection and guaranteed low rental rates, our knowledgeable sales staff is standing by to answer any questions you have about getting the job done right.

Contact one of our below repair facilities to inquire about our tool rental programs

USA
Global Mining Products Inc
400 Front Street
Elko, NV 89801
Ph: 775-778-3410

CANADA
Global Mining Products Inc
107-2567 192 Street
Surrey BC V3S3X1
Ph: 604-538-0058

INDONESIA
PT GloMinPro Indonesia
Kelurahan Graha Indah
Kecamatan Balikpapan Utara
East Kalimantan 76126
Ph: 6205.4287.4097

GLOBAL MINING PRODUCTS

Quality, Service, Value

Tire Inflation Products

Super Giant Bore

VLH-SGB-130 - LENGTH Complete swivel valve assembly including VLH-SGB-110 & VLH-SGB-120

VLH-SGB-131 - LENGTH Same as SGB-130 but without SGB-120

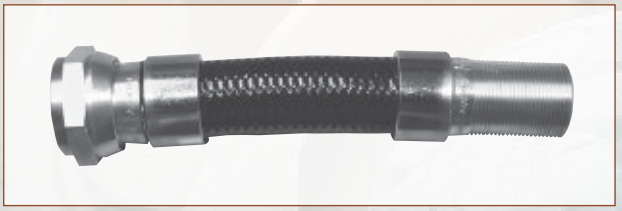

VLH-SGB-135
Flexible extension only

VLH-SGB-120
Rim spud fits 15/16"hole

VLH-SGB-115
Rim spud fits 3/4" NPT hole

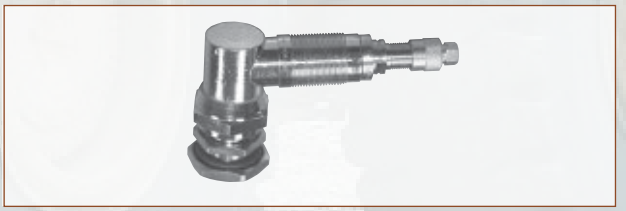

VLH-SGB-145
Swivel valve assembly

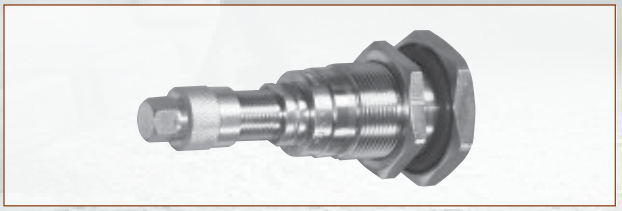

VLH-SGB-140
Straight valve assembly

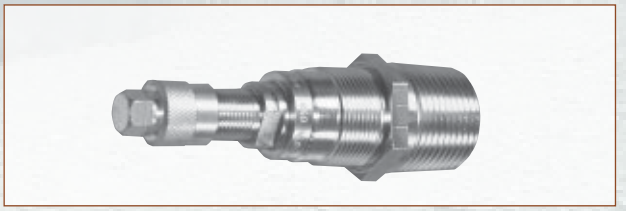

VLH-SGB-141
Straight valve assembly

Super Giant Bore

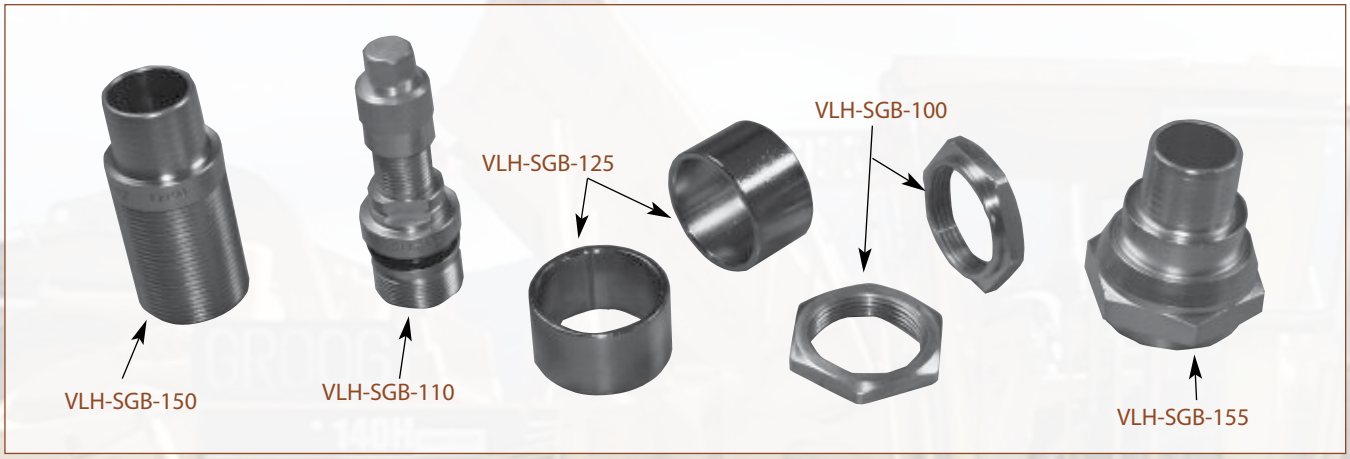

VLH-SGB-160 & VLH-SGB160/1 KITS

VLH - SGB-160

Includes: (1) VLH-SGB-110, (1) VLH-SGB-150, (1) VLH-SGB-155
(2) VLH-SGB-125, (2) VLH-SGB-100

VLH-SGB-160/1

Includes: (1) VLH-SGB-150, (1) VLH-SGB-155,
(2) VLH-SGB-125, (2) VLH-SGB-100

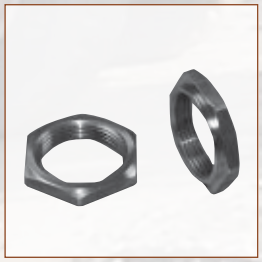

VLH-SGB-100

VLH-SGB-110

VLH-SGB-125

VLH-SGB-150

VLH-SGB-155

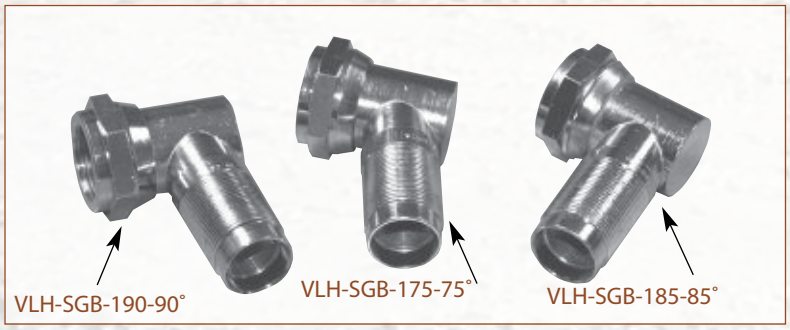

SGB SWIVEL CONNECTORS

All swivel connectors fit on VLH-SGB-115 and VLH-SGB-120 spuds

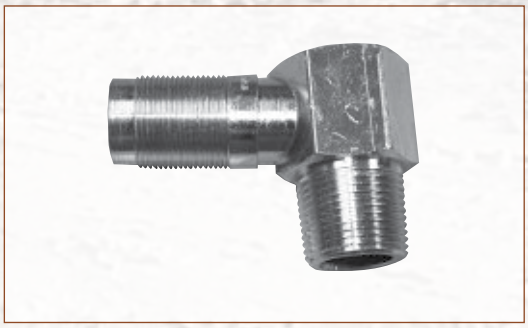

VLH-SGB-285

85˚ screw-in angle spud fits 3/4" NPT thread

Super Giant Bore

VLH-SGB-165

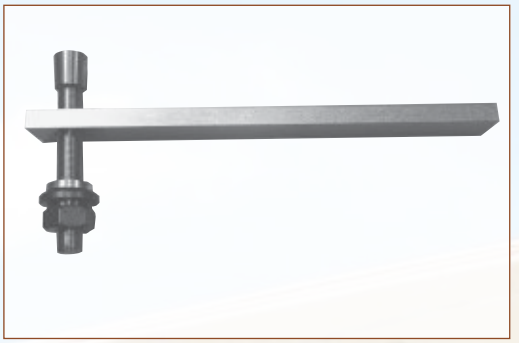

TST-SGB-950
Assembly Tool

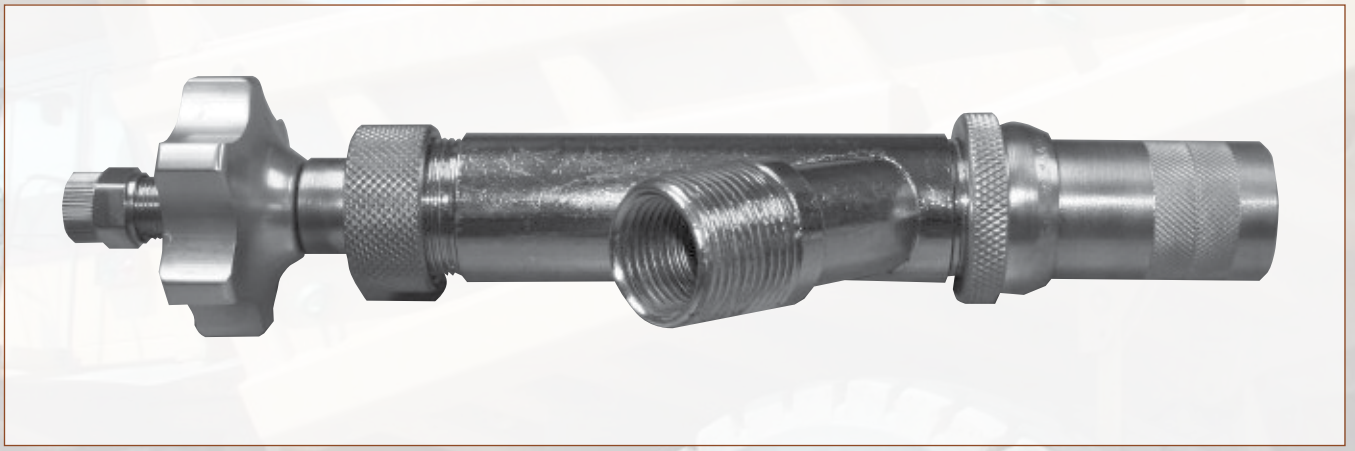

TST-SGB-900S

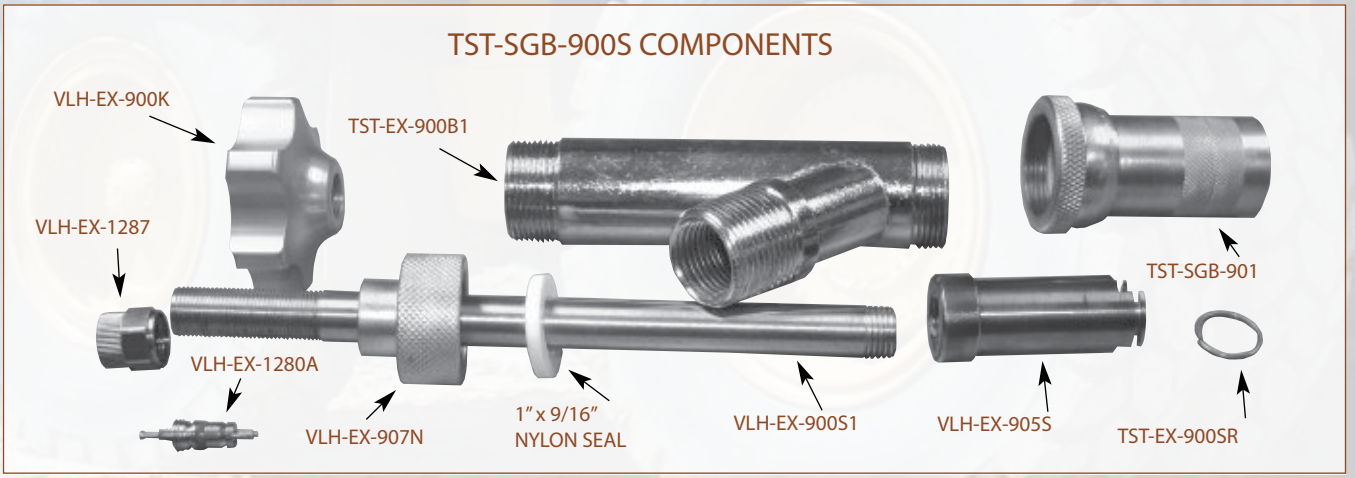

Inflator Adaptor
Permits faster and safer inflation/deflation of giant tires. Can be attached to 1/2" NPT or 3/4" NPT.

VLH-SXL-1650

VLH-SXL-1800

VLH-SXL-1650 - LENGTH Complete swivel valve including VLH-SXL-1050 and VLH-SXL-1008

VLH_SXL-1600 - LENGTH Same as VLH-SXL-1650 but with VLH-SXL-1008 spud

VLH-SXL-1800 - LENGTH Flexible extension only

VLH-SXL-2000
Straight valve assembly

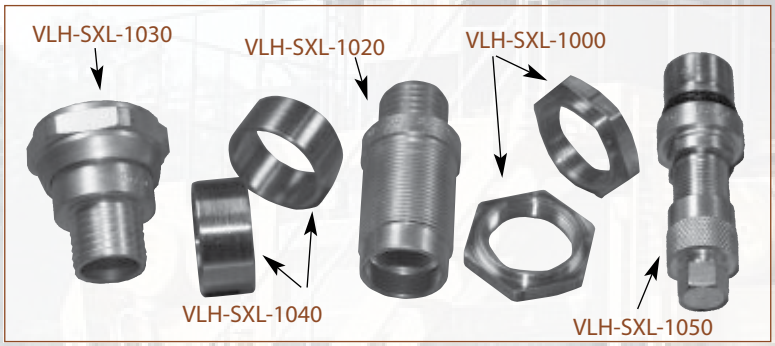

VLH-SXL-1400K and VLH-SXL-1400K/1 Kits

SXL-1400K includes:
(1) VLH-SXL-1050, (1) VLH-SXL-1020, (1) VLH-SXL-1030
(2) VLH-SXL-1000, (2) VLH-SXL-1040

SXL-1400K/1 includes:
(1) VLH-SXL-1020, (1) VLH-SXL-1030
(2) VLH-SXL-1000, (2) VLH-SXL-1040

VLH-SXL-1008 VLH-SXL-1008L
Rim spud fits 13/16" hole

VLH-SXL-1030

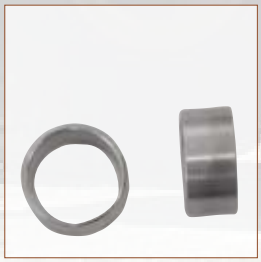

VLH-SXL-1040

VLH-SXL-1020

VLH-SXL-1000

VLH-SXL-1050

Super Excel

VLH-SXL-1900 Swivel Valve Assembly
Includes VLH-SXL-1050, (2) VLH-SXL-1000 and VLH-SXL-1008 spud.

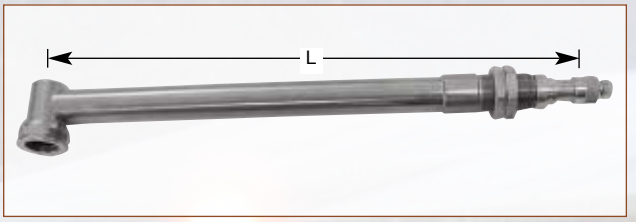

VLH-SXL-1700 Swivel Valve Assembly
Same as VLH-SXL-1900 but without the VLH-SXL-1008 spud

VLH-SXL-1010

VLH-SXL-1010	90˚
VLH-SXL-1012	85˚
VLH-SXL-1013	80˚
VLH-SXL-1014	75˚
VLH-SXL-1015	60˚

All swivel connectors fit on VLH-SXL-1005, VLH-SXL-1008, VLH-SXL-1008L and VLH-SXL-1009.

VLH-SXL-1015

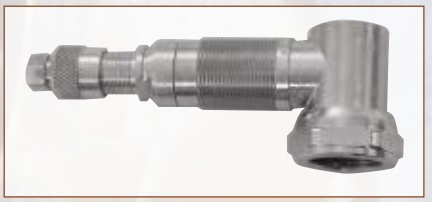

VLH-SXL-1500
Swivel Valve Assembly

VLH-SXL-1075

VLH-SXL-1290

TST-SXL-900S

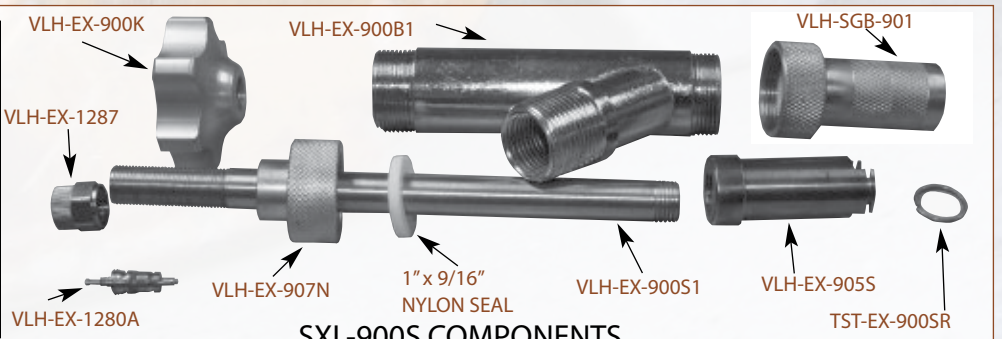

SXL-900S COMPONENTS

Inflator Adaptor
Permits faster and safer inflation/deflation of giant tires. Can be hooked to 1/2" NPT or 3/4" NPT.

VLH-SXL-1789

SXL Custom valve
Can be formed to fit most Off-Highway trucks

VLH-SXL-930E3

VLH-SXL-930E

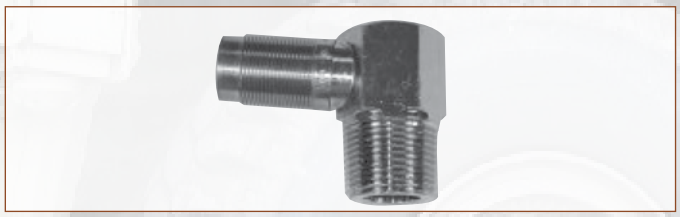

VLH-SXL-1018
85˚ Screw-in Angle Spud fits 3/4"NPT thread

VLH-SXL-1007
Loader Tire Valve (Complete)

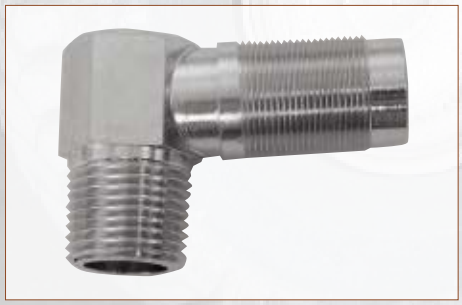

VLH-SXL-1006
85˚ Screw-in Angle Spud fits
1/2"NPT thread

VLH-SXL-1005 VLH-SXL-1009
Screw-in Spud fits 1/2"NPT &
3/4"NPT thread

Super Large Bore

VLH-EXM-1950

VLH-EXM-1950

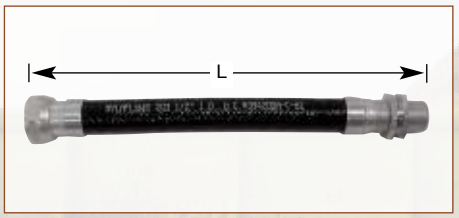

VLH-EXM-3000

VLH-EXM-1950 - LENGTH Complete swivel valve including VLH-EXR-520 core housing & VLH-EXT-81 spud.

VLH-EXM-1900 - LENGTH Same as VLH-EXM-1950, but without VLH-EXT-81 spud.

VLH-EXM-3000 - LENGTH Flexible extension only.

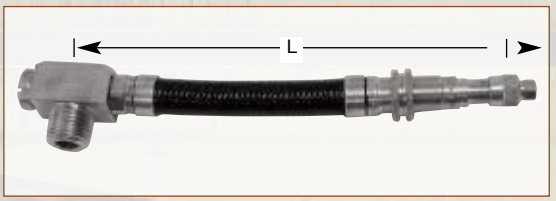

VLH-EXDS-296

Super Large Bore Double Spud Valve Assembly. Designed for wheel where space is critical. Valve height above rim is only 7/8". Consists of VLH-EXDS-210, VLH-EXDS-215, VLH-EXM-4000 & VLH-EXR-520

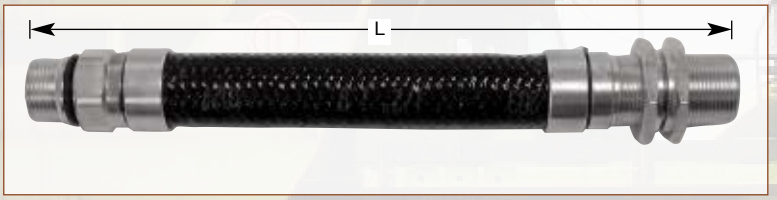

VLH-EXM-4000

Flexible Extension for VLH-EXDS-296. Any length may be ordered Includes: VLH-EXDS-226, VLH-EXR-763, VLH-EXR-764R, VLH-EXR-760, VLH-EXB-222

VLH-EXDS-210P

VLH-EXDS-210

VLH-EXDS-226

VLH-EXDS-215

Super Large Bore

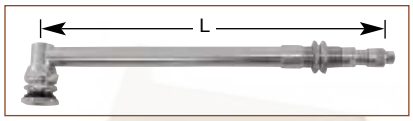

VLH-EXMR-850

VLH-EXMR-850 LENGTH - SWIVEL VALVE
Same as VLH-EXMR-800, but with VLH-EXT-81spud.

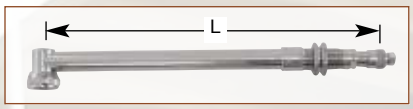

VLH-EXMR-800

VLH-EXMR-800 LENGTH - SWIVEL VALVE
Includes EXR-520 and (2) EXB-222 nuts.

VLH-EXMR-890

VLH-EXMR-890
Super Large Bore - Turret Type

VLH-EXR-760

VLH-EX-445

TST-EX-990

VLH-EX-117-0764

VLH-EX-144-0290

VLH-EX-146-6779

VLH-EXR-520

VLH-EXR-764R

VLH-EXR-763

VLH-EXR-762S

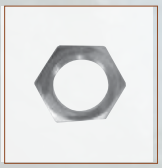

VLH-EXB-222

Assembly Kits for Super Large Bore

VLH-EXR-969K-1 - consists of:
(1) VLH-EXR-762S, (1) VLH-EXR-763
(2) VLH-EXR-764R, (2) VLH-EXB-222

VLH-EXR-969K - consists of:
(1) VLH-EXR-762S, (1) VLH-EXR-763
(2) VLH-EXR-764R, (2) VLH-EXB-222, (1) VH-EXR-520

Super Large Bore

VLH-EXDS-210
Double-end spud
Fits 13/16" hole

VLH-EXDS-210P
Double-end spud
Fits 1/2" NPT thread

VLH-EXT-81
(TR-SP8) Spud
Fits 13/16" hole

VLH-EXC-100
Screw-in spud
Fits 1/2" NPT thread

VLH-EXT-82

Super Large Bore
Spud, Similar to VLH-EXT-81. Features additional 9/32" height.

VLH-EXX-381

Super Large Bore
Outside-in spud

VLH-EXT-999

Super Large Bore
Loader Valve

EXM-1000

Straight valve assembly using VLH-EXR-521 core housing and VLH-EXC-200 Screw-in spud

VLH-EXC-200

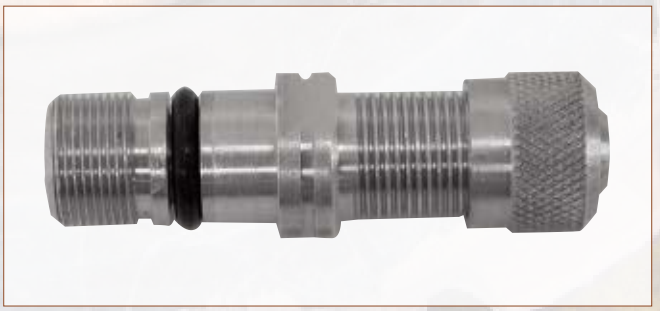

VLH-EXR-521

Super Large Bore

VLH-EXT-85

85˚ Super Large Bore angle spud for application where low clearance is required. Fits 13/16" hole.

VLH-EXS-75D

75˚ or 85˚ screw-in angle spud furnished with a locking nut and teflon seal.
Fits 1/2" NPT thread.

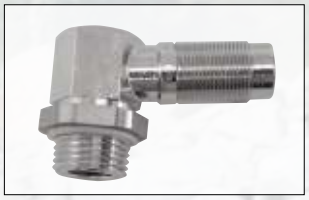

VLH-EXS-85D

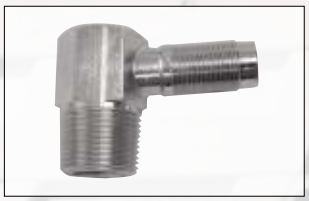

VLH-EXS-85/1

85˚ screw-in angle spud
Fits 3/4" NPT thread.

VLH-EXM-1870

Straight valve assembly using VLH-EXT-81 and VLH-EXR-520

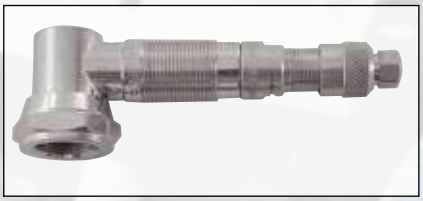

VLH-EXM-2000

90˚ Swivel valve assembly
3-1/8" effective length

VLH-EXS-85 VLH-EXS-75

75˚ or 85˚ screw-in angle spud
Fits 1/2" NPT thread

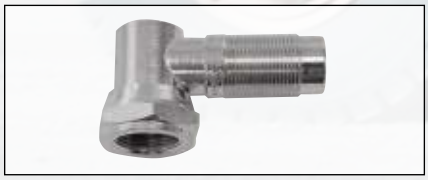

VLH-EXR-525

VLH-EXR-660

VLH-EXR-525	90˚
VLH-EXR-685	85˚
VLH-EXR-680	80˚
VLH-EXR-675	75˚
VLH-EXR-670	70˚
VLH-EXR-660	60˚

All swivel connectors fit on VLH-EXT-81, VLH-EXT-82, VLH-EXC-100 and VLH-EXX-381

Super Large Bore

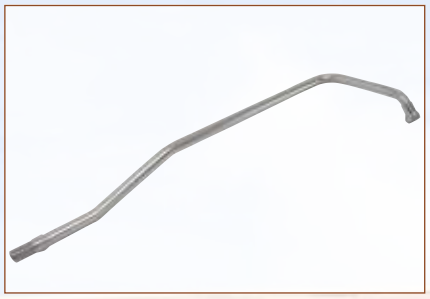

VLH-EX-777BO

VLH-EX-789O

VLH-EX-1239

Special formed Super Large Bore Valves
For large OFF-HIGHWAY trucks such as CATERPILLAR. Can be formed to fit most vehicles

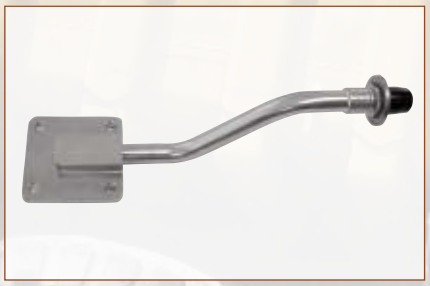

VLH-EX-9002 (short) and VLH-EX-9004 (long)

Special formed Super Large Bore Valves
For large OFF-HIGHWAY trucks such as TEREX 33-15.
Available in 10" and 14" stem.

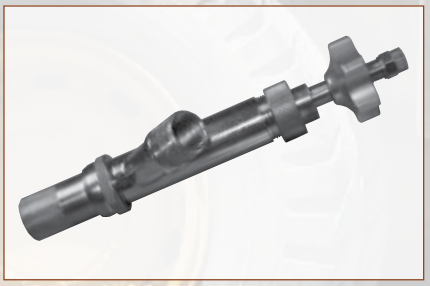

TST-EX-900S

Permits faster and safer inflation/deflation of Giant Tires.
Can be hooked to 1/2" NPT or 3/4" NPT.

TST-EX-900S COMPONENTS

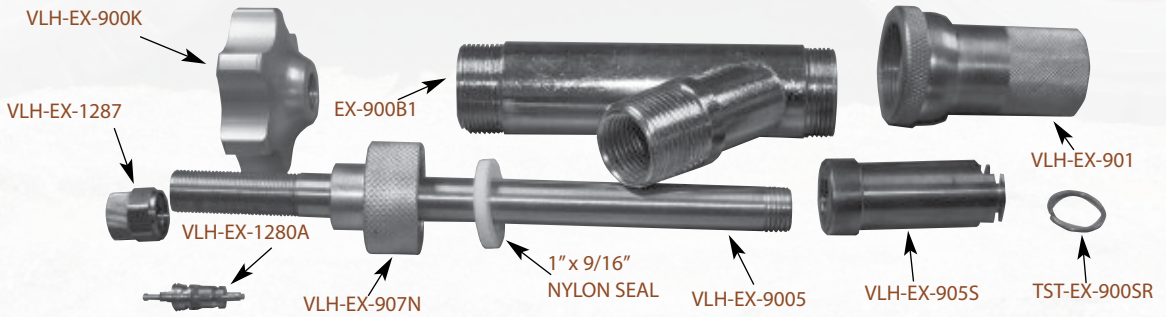

Large Bore

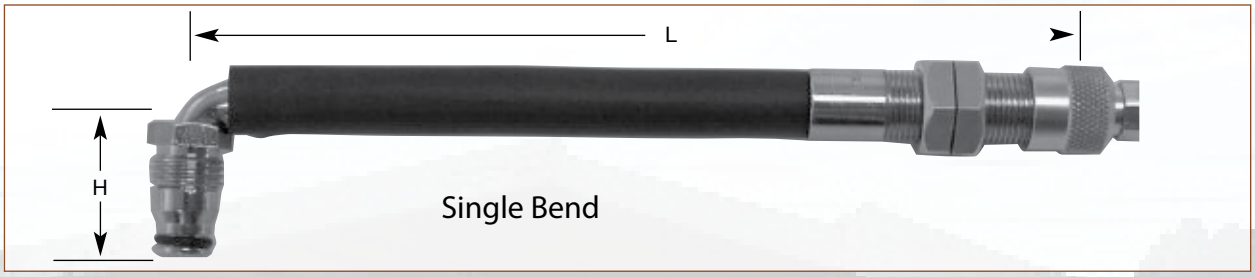

Part No.	TR No.	Bend Angle	Length		Height	
			Inch	MM	Inch	MM
VLH-EX-52-2		25˚	2	50.8	1-1/16	27.0
VLH-EX-54-6		90˚	6	152.4	2-3/8	60.3
VLH-EX-58-2-1/2		60˚	2-1/2	62.7	2-1/8	54.0
VLH-EXJ-650	J-650	80˚	3-1/8	79.4	1-5/64	27.7
VLH-EXJ-651	J-651	90˚	4-	119.0	1-17/64	32.1
VLH-EXJ-652	J-652	86˚	11/16	139.7	1-5/64	27.4
VLH-EXJ-653	J-653	80˚	5-1/2	62.7	1-5/64	27.4
VLH-EXJ-654	J-654	60˚	2-1/2	79.4	1-5/64	27.4
VLH-EXJ-655	J-655	74˚	3-1/8	79.4	1-5/64	27.4
VLH-EXJ-656	J-656	90˚	3-1/8	93.7	2-5/8	66.7
VLH-EXJ-657	J-657	80˚	3-	101.6	1-5/64	27.4
VLH-EXJ-658	J-658	80˚	11/16	139.7	1-5/64	27.4
VLH-EXJ-659	J-659	90˚	4	88.9	1-57/64	50.4
VLH-EXJ-660	J-660	90˚	5-1/2	222.3	1-57/64	50.4
VLH-EXJ-668	J-668	90˚	3-1/2	119.0	5-1/8	130.2
VLH-EXJ-669	J-669	90˚	8-3/4	62.7	1-5/64	27.4
VLH-EX-3101/1		80˚	4-	114.3	1-5/64	27.4
VLH-EX-3110/1		80˚	11/16	228.6	1-5/64	27.4
VLH-EXJ-4002.5	J-4000-2 1/2	90˚	2-1/2	62.7	1-5/64	27.4
VLH-EXJ-4003	J-4003	90˚	4-1/2	75.2	1-5/64	27.4
VLH-EXJ-4004	J-4000-4	90˚	9	101.6	1-5/64	27.4
VLH-EXJ-4004.5	J-4000-4 1/2	90˚	2-1/2	114.3	1-5/64	27.4
VLH-EXJ-4005	J-4000-5	90˚	3	127.0	1-5/64	27.4
VLH-EXJ-4006	J-4000-6	90˚	4	152.4	1-5/64	27.4
VLH-EXJ-4007.5	J-4000-7 1/2	90˚	4-1/2	190.5	1-5/64	27.4
VLH-EXJ-4008	J-4000-8	90˚	5	203.2	1-5/64	27.4
VLH-EXJ-4009	J-4000-9	90˚	6	228.6	1-5/64	27.4
VLH-EXJ-4010	J-4000-10	90˚	7-1/2	254.0	1-5/64	27.4
VLH-EXJ-4010.5	J-4000-10	90˚	8	266.7	1-5/64	27.4
VLH-EXJ-4011	1/2	90˚	9	279.4	1-5/64	27.4
VLH-EXJ-4012	J-4000-11	90˚	10	304.8	1-5/64	27.4
VLH-EXJ-4013	J-4000-12	90˚	10-1/2	330.2	1-5/64	27.4
VLH-EXJ-4016	J-4000-13	90˚	11	406.4	1-5/64	27.4
VLH-EXJ-4024	J-4000-16	90˚	12	609.6	1-5/64	27.4
VLH-EXJ-4028	J-4000-24	90˚	13	711.2	1-5/64	27.4
VLH-EXJ-4029.5	J-4000-28	90˚	16	749.3	1-5/64	27.4
VLH-EXJ-4030	J-4000-29	90˚	24	762.0	1-5/64	27.4
VLH-EXJ-4032	1/2	90˚	28	812.8	1-5/64	27.4
VLH-EXJ-4036	J-4000-30	90˚	29-1/2	914.4	1-5/64	27.4
	J-4000-32		30			
	J-4000-36		32			

Any other length can be ordered. All valves equipped with core and cap. On lengths over 6”, two (2) lock nuts are furnished.

All large bore swivel valves can be used with any large rim spud

Large Bore

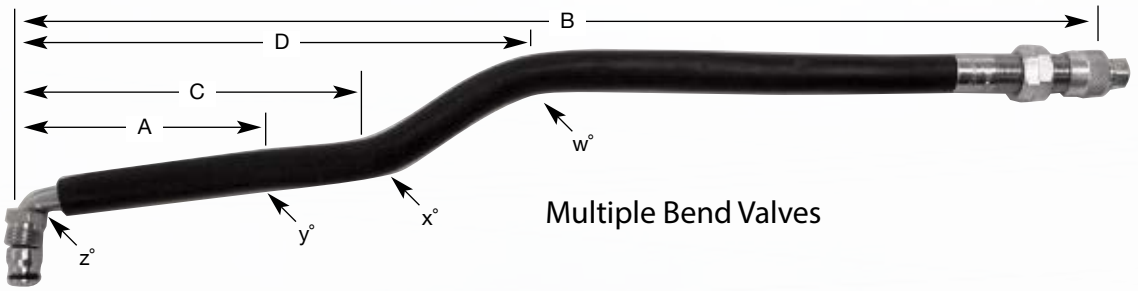

Multiple Bend Valves

Part No.	TR No.	A	B	C	D	w°	x°	y°	z°
VLH-EXJ-662	J-662		14.00	4.50	5.87	20	20		90
VLH-EXJ-663	J-663		25.00	2.00	6.00	8	8		90
VLH-EXJ-665	J-665		32.00	2.00	5.94	13	13		90
VLH-EXJ-666	J-666	3.28	20.12	4.38	6.22	31	31	6	84
VLH-EXJ-5013		3.50	14.00	4.50	6.50	30	30	5	85
VLH-EXJ-661	J-661		4.50	1.88			8		82
VLH-EXJ-664	J-664		8.750	4.00			13		90
VLH-EXJ-667	J-667		7.50	3.00			11		90

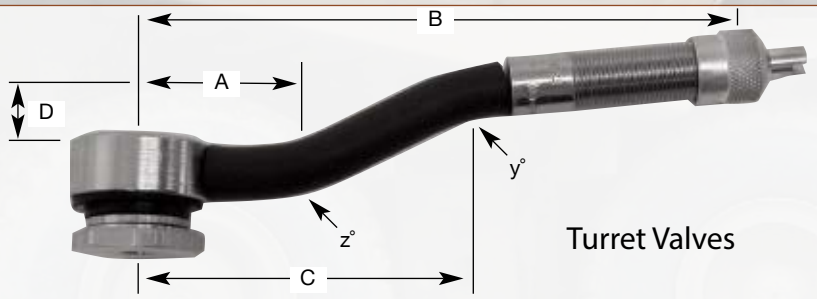

Turret Valves

Part No.	TR No.	A	B	C	D	y°	z°
VLH-EXJ-690	J-690	1.25	4.69	2.31	.56	28	28
VLH-EXJ-690B		.75	3.75	1.75	.56	28	28
VLH-EXJ-690B1		.75	3.00	1.20	.40	28	28
VLH-EXJ-690/A		.75	5.00	2.88	.625	16	16
VLH-EXJ-690/7		3.50	7.00	4.83	.56	28	28
VLH-EXJ-690/8		2.00	8.00	3.33	.56	28	28
VLH-EXJ-691	J-691	.62	3.31				18
VLH-EXJ-691-2		.650	2.65				18
VLH-EXJ-691B		.62	8.50				18
VLH-EXJ-692	J-692	1.25	4.69	2.31	.56	18	28
VLH-EXJ-693	J-693	.88	5.00	1.69	1.00	45	45
VLH-EXJ-694	J-694	.78	3.50				28
VLH-EXJ-695	J-695	.81	4.12	2.19	1.00	50	50
VLH-EXJ-696	J-696	1.06	4.25	2.06	.91	42	42
VLH-EXJ-697		3.50	5.50				25

Large Bore

Part No.	TR No.	A Angle	B Height	C Length
VLH-EX-1264	J-1078A	STRAIGHT	5.780	
VLH-EX-1265	J-1078C	90º	1.125	4.825
VLH-EX-1266	J-1076E	88º	1.375	3.00
VLH-EX1267	J-1076B	86º	1.125	3.250
VLH-EX-1268	J-1076A	STRAIGHT	4.16	
VLH-EX-1269	J-1076D	90º	2.06	2.31
VLH-EX-1270	J-1014	STRAIGHT	1.91	
VLH-EX-1271	J-1076C	90º	1.50	2.825
VLH-EX-1272	J-1078B	82º	1.375	4.625
VLH-EX-1273	J-1175C	88º	1.375	4.125
VLH-EX-1274	J-1177A	STRAIGHT	4.50	
VLH-EX-1275	J-1179B	88º	1.375	5.250
VLH-EX-1276	J-1178A	STRAIGHT	5.280	
VLH-EX-1277	J-1175B	82º	1.250	4.250
VLH-EX-1278	J-1179A	STRAIGHT	6.406	

Screw-on repair valves

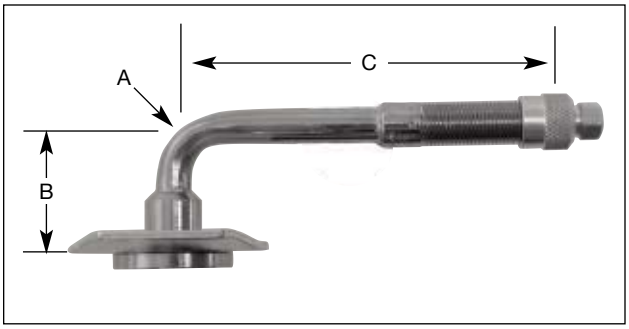

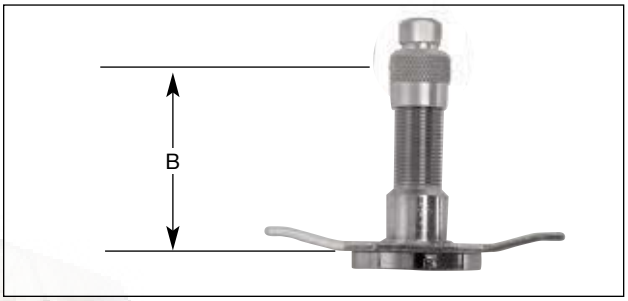

Part No.	Bend Angle	Length		Height	
		Inch	MM	Inch	MM
VLH-EXHB-S11	90˚	11	279.4	1-29/32	48.3
VLH-EXHB-S51/2	90˚	5-1/2	139.7	2-1/16	52.4

High bend valves

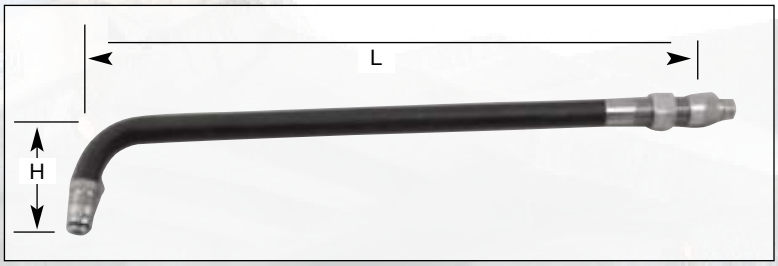

Part No.	Length	Bends	Description
VLH-EXD-0585EC	17-5/16	4	Extension
VLH-EXD-5008EC	17-13/16	4	Extension
VLH-EXD-7103EC	16-1/4	4	Extension
VLH-EXD-9903EC	16-7/8	4	Extension
VLH-EXG-0570VC	19-31/32	5	Valve
VLH-EXG-1450VC	32-7/8	5	Valve
VLH-EXG-4985VC	19-3/4	4	Valve
VLH-EXG-5200VC	27	5	Valve
VLH-EXG-5410VC	31-9/16	5	Valve
VLH-EXG-5420VC	33	5	Valve
VLH-EXG-8018VC	26-3/4	4	Valve
VLH-EXG-8019VC	8	1	Valve
VLH-EXG-9440VC	27	5	Valve
VLH-EXG-9470VC	31-1/2	5	Valve

Special formed valves

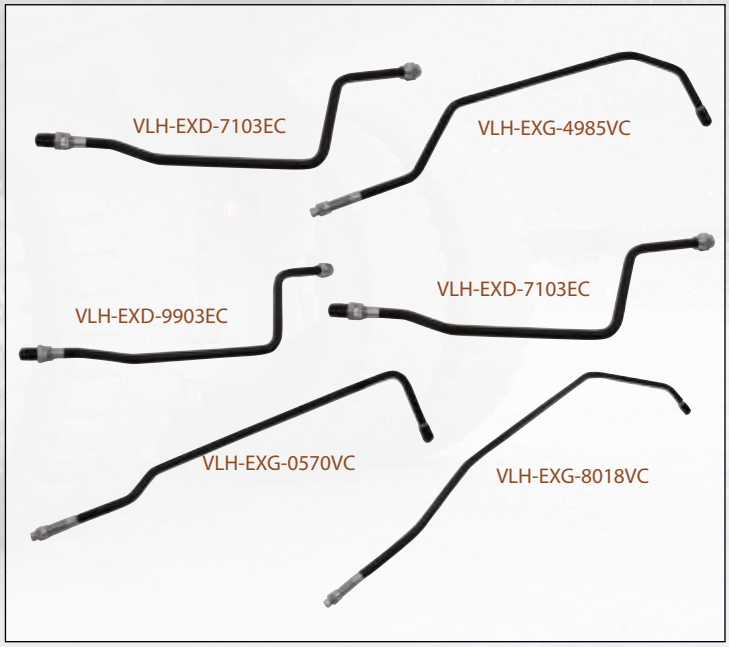

Large Bore

VLH-EXT-670
Loader Tire Valve (Complete)

VLH-EX-3150/1
Straight Valve (Complete)

VLH-EX-3150
Straight Valve with spud

VLH-EX-1302
Tubeless Spud - Fits 13/16" rim hole

VLH-EX-1305
Outside-in tubeless spud
Fits 13/16" rim hole

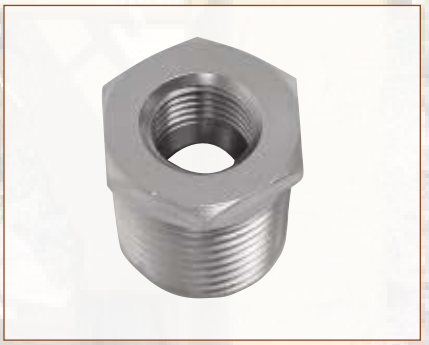

VLH-EXC-10
Screw-in tubeless spud
fits 1/2" NPT tapped hole

VLH-EXH-4000
Adaptor converts SP-1000 spud to L.B. swivel valves

VLH-EXH-4000/1
Same as EX-4000 except without bridge washer

VLH-EX-1300
Rim hole plug -used to seal 13/16" rim hole

Large Bore

VLH-EX-1281
Screwdriver cap (TR-VC-6)
Fits .482-26 valve thread

VLH-EX-1283
Hex valve cap (TR-VC-7)
Fits .482-26 valve thread

VLH-EX-1284
Valve cap for VLH-EX-1285
Fits .302-32 valve thread

VLH-EX-1280
Long valve core (TR-C-2)
Fits all large bore valves

VLH-EX-1280A
Short valve core (TR-C-2) -
Heat resistant and fits all large bore valves

VLH-EX-1287
Dome valve cap (VC-10)
Fits .482-26 valve thread

VLH-EX-1285
Adapter to convert large bore to standard bore. Fits .482-26 thread

VLH-EX-AD1
Adaptor to convert large bore to standard bore. Fits .302-32 thread

Large Bore

Part No.	Length	
	Inch	MM
VLH-EX-2002	2	50.80
VLH-EX-2003	3	76.2
VLH-EX-2004	4	101.6
VLH-EX-2005	5	127.0
VLH-EX-2006	6	152.4
VLH-EX-2007	7	177.8
VLH-EX-2008	8	203.2
VLH-EX-2009	9	228.6
VLH-EX-2010	10	254.0
VLH-EX-2011	11	279.4
VLH-EX-2012	12	304.8
VLH-EX-2013	13	330.2
VLH-EX-2014	14	355.6
VLH-EX-2015	15	381.0
VLH-EX-2016	16	406.4
VLH-EX-2017	17	431.8
VLH-EX-2018	18	457.2
VLH-EX-2019	19	482.6
VLH-EX-2020	20	508.0

Rigid Brass Extensions

Any other length can be ordered. All extensions are equipped with core deflector and hex cap. On lengths over 4", 2 lock nuts are furnished.

Hand Bendable Extensions

Part No.	Length	
	Inch	MM
VLH-EX-3003	3	76.2
VLH-EX-3004	4	101.6
VLH-EX-3005	5	127.0
VLH-EX-3006	6	152.4
VLH-EX-3007	7	177.8
VLH-EX-3008	8	203.2
VLH-EX-3009	9	228.6
VLH-EX-3010	10	254.0
VLH-EX-3011	11	279.4
VLH-EX-3012	12	304.8
VLH-EX-3013	13	330.2
VLH-EX-3014	14	355.6
VLH-EX-3015	15	381.0
VLH-EX-3016	16	406.4
VLH-EX-3017	17	431.8
VLH-EX-3018	18	457.2
VLH-EX-3019	19	482.6
VLH- EX-3020	20	508.0

Any other length can be ordered. These extensions are equipped with 2 lock nuts, 1 sealing nut. You must use cap and core from valve on which the extension is being fitted.

Flexible Extensions

Part No.	Length	
	Inch	MM
VLH-EX-6005	5	127.0
VLH-EX-6006	6	152.4
VLH-EX-6007	7	177.8
VLH-EX-6008	8	203.2
VLH-EX-6009	9	228.6
VLH-EX-6010	10	254.0
VLH-EX-6011	11	279.4
VLH-EX-6012	12	304.8
VLH-EX-6013	13	330.2
VLH-EX-6014	14	355.6
VLH-EX-6015	15	381.0
VLH-EX-6016	16	406.4
VLH-EX-6017	17	431.8
VLH-EX-6018	18	457.2
VLH-EX-6019	19	482.6
VLH-EX-6020	20	508.0

Any other length can be ordered. These extensions are equipped with 2 lock nuts, 1 sealing nut, 1 valve cap and 1 valve core.

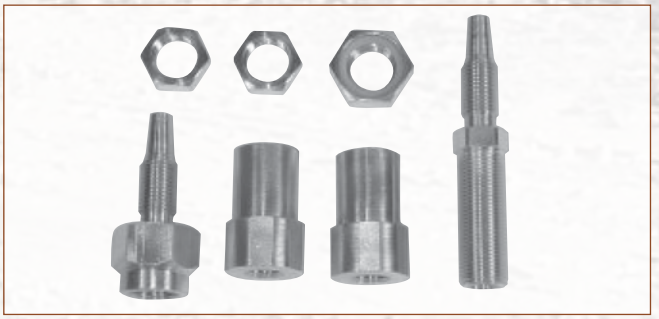

VLH-EX-6000K

Air/Liquid Extensions
Used with tractor / grader valves

VLH-EX-670

Part No.	TR No.	A	B	Angle	Hole
VLH-EX-670	TR-618A	1 7/8			.625
VLH-EX-670R	TR-618A	1 7/8			.625
VLH-EX-672	TR-622A	1 3/4	4 1/2	90º	.625
VLH-EX-678	TR-623A	1 1/2	2 1/4	65º	.625
VLH-EX-679	TR-621A	1 1/2	3	65º	.625

VLH-EX-678

VLH-EX-670R

VLH-EX-5905

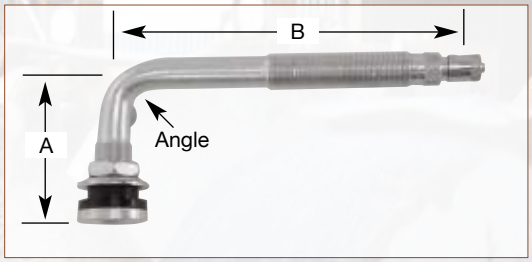

VLH-EX-672

VLH-EX-679

VLH-EX-670P

VLH-EX-LN10

VLH-EX-LN10B

VLH-EX-CH1
(CH-1)

VLH-EX-683A
(CH-3)

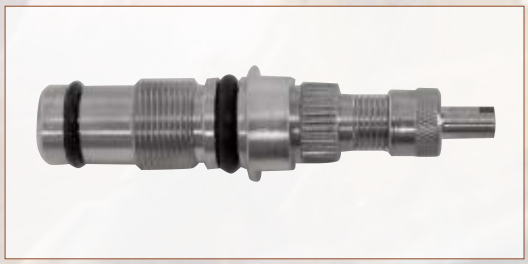

VLH-EXR-625
(CH-16)

VLH-EXR-626
(CH-16 & SP-8)

VLH-JF-944
Available in brass
or nickle finish

Tractor & Grader

Air/Liquid Extensions
Used with tractor / grader valves

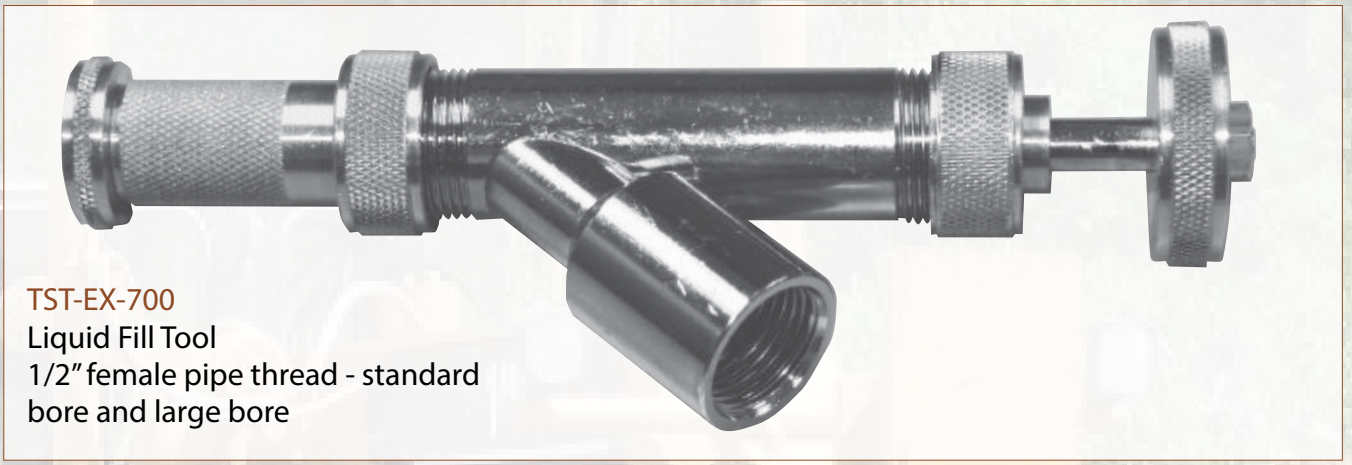

TST-EX-700
Liquid Fill Tool
1/2" female pipe thread - standard bore and large bore

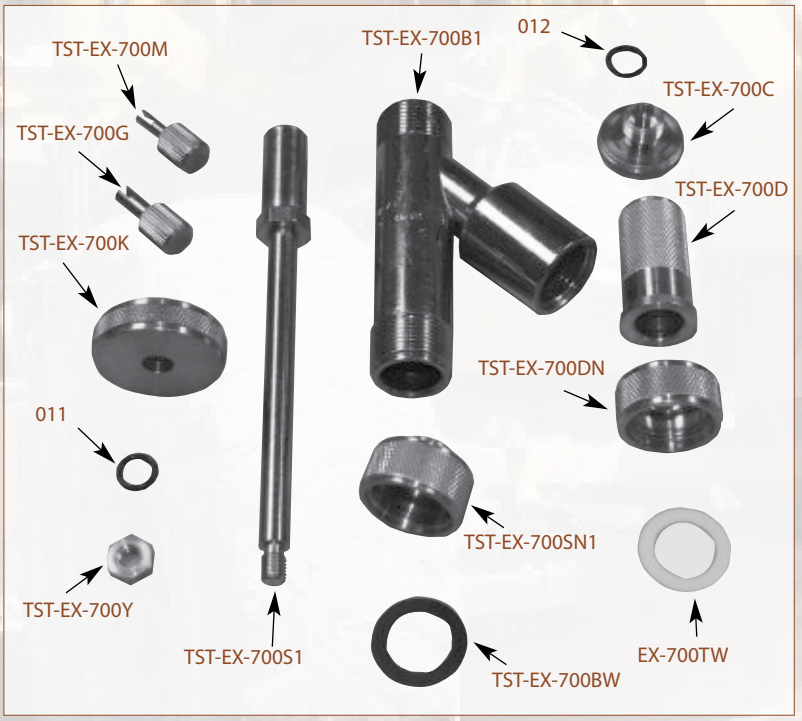

TST-EX-700 COMPONENTS

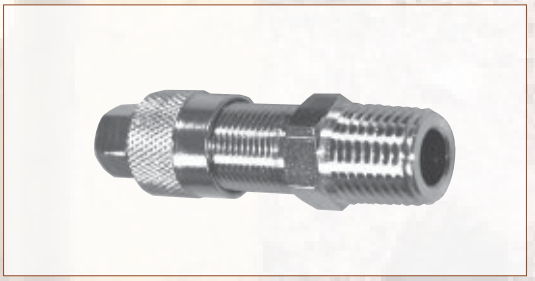

VLH-EX-6047

VLH-EX-402

VLH-EX-400 VLH-EX-401

Tank Valves

Part No.	Tread	Length	Bore
VLH-EX-400	1/4 NPT	1 5/16"	Standard
VLH-EX-401	1/8 NPT	27/32"	Standard
VLH-EX-402	1/8 NPT	1 5/16"	Standard
VLH-EX-6047	1/4 NPT	1 19/32	Large Bore

Part No.	Part No.	TR#	Length	Valve Hole
	VLH-EX-1223R		2" bent at 92°	.625
	VLH-EX-1296	575	1-1/8"	.625
	VLH-EX-1296A	501	1-1/2"	.625
	VLH-EX-1296B	500	2"	.625
VLH-EX-1298C	VLH-EX-1296C	570	3-1/8"	.625
VLH-EX-1298D	VLH-EX-1296D	571	3-3/8"	.625
VLH-EX-1298E	VLH-EX-1296E	572	3-3/4	.625
VLH-EX-1298F	VLH-EX-1296F	573	4-3/8"	.625
	VLH-EX-1296G	574	5"	.625EX
	VLH-EX-1296H	501 oval	1 1/8"	.625 oval

"O" ring seal valves for Alcoa type wheels .389" valve hole.

VLH-EX-1296 Series

VLH-EX-1298 Series

Part No.	TR#	Bend	"A"	"B"
VLH-EX-542	542	STR	1.25	
VLH-EX-543	543	STR	2.40	
VLH-EX-543C	543C	45°	0.93	1.43
VLH-EX-543D	543D	60°	0.98	1.38
VLH-EX-544D	544D	60°	0.98	1.94
VLH-EX-545B	545B	26°	1.38	2.20
VLH-EX-545D	545D	60°	0.98	2.60
VLH-EX-546D	546D	60°	0.98	3.35
VLH-EX-547D	547D	60°	0.98	3.78

VLH-EX-543C | VLH-EX-544D | VLH-EX-545D

EX-1299 SERIES

Part No.	ETRTO	Bend	"A"	"B"	Finish
VLH-EX-1299A	V3-20-1	STR	1-3/16		Chrome
VLH-EX-1299B	V3-20-6	27°	1-3/16	3-3/8	Chrome
VLH-EX-1299E	V3-20-4	27°	1-3/16	2-3/8	Chrome

VLH-V3-20

Part No.	ETRTO	Bend	Effective Length	Valve Hole
VLH-EX-1296Z	WH23A	STR	3/4"	.453
VLH-EX-1296Z1	WH206	STR	1-1/4"	.453
VLH-EX-1296Z2		45°		.453

VLH-EX-1296Z (Einke)

Part No.	TR#	Length
VLH-EX-513	513	2-5/8"
VLH-EX-515	515	3-1/4"

VLH-EX-513

Extra low height, double bend clamp-in truck tubeless valves.

Truck & Bus

Part No.	TR#	Length
VLH-EX-509	509	4-3/4″
VLH-EX-510	510	5-1/4″
VLH-EX-511	511	4-1/4″

Truck valves for Alcoa aluminum truck wheels

VLH-EX-509

Part No.	TR#	Length	Grommet
VLH-EX-416	416	1-1/4″	.625 & .453
VLH-EX-416L	416	2″	.625 & .453
VLH-EX-416S1	416	3/4″	.625 & .453

Small clamp-in valves

VLH-EX-416

Screw-On Repair Valves

Part No.	TR#	Length
VLH-EX-1177A	1177A	3-1/4″
VLH-EX-1077A	EX-1077A	4-1/8″
VLH-EX-1175A	1175A	4-1/2″
VLH-EX-1078A	1078A	5″
VLH-EX-1179A	1179A	5-1/8″

VLH-EX-1078A

Straight Metal Extensions

Short Collar	Long Collar	Effective Length
VLH-EX-1500	VLH-EX-1500L	2″
VLH-EX-1501	VLH-EX-1501L	3″
VLH-EX-1502	VLH-EX-1502L	5″
VLH-EX-1503	VLH-EX-1503L	3-5/8″
VLH-EX-1504	VLH-EX-1504L	4″
VLH-EX-1505	VLH-EX-1505L	1-1/4″
VLH-EX-1506	VLH-EX-1506L	6″

Flexible Extensions

Part No.	Length
VLH-EX-1407	7-1/2″
VLH-EX-1410	10″

VLH-EX-1407

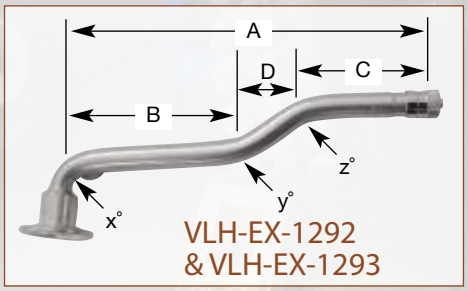

VLH-EX-1292
& VLH-EX-1293

Michelin Type Screw-On Valves

Part No.	A	B	C	D	x°	y°	z°	Bends
VLH-EX-1292A	2.50				86˚			1
VLH-EX-1292B	3.00				86˚			1
VLH-EX-1292C	4.00				86˚			1
VLH-EX-1292D	4.50				86˚			1
VLH-EX-1292E	5.00				86˚			1
VLH-EX-1292G	6.00				86˚			1
VLH-EX-1292T	3.00	1.10	1.90		86˚	16˚		2
VLH-EX-1292N	3.75	1.90	1.85		86˚	16˚		2
VLH-EX-1292P	4.00	2.25	1.75		86˚	16˚		2
VLH-EX-1292Q	4.50	2.70	1.80		86˚	16˚		2
VLH-EX-1292R	5.00	3.15	1.85		86˚	16˚		2
VLH-EX-1292S	5.50	3.35	2.15		86˚	16˚		2
VLH-EX-1293Q	3.70	1.60	1.60	.50	86˚	16˚	26˚	3
VLH-EX-1293L	4.00	1.90	1.60	.50	86˚	16˚	26˚	3
VLH-EX-1293M	4.50	2.40	1.60	.50	86˚	16˚	26˚	3
VLH-EX-1293N	5.00	2.50	2.00	.50	86˚	16˚	26˚	3
VLH-EX-1293R	5.50	3.00	2.00	.50	86˚	16˚	26˚	3

Gauges

GAU-EX-1025
Air/liquid gauge/ tractor
5-45 PSI

GAU-EX-1030
Truck tire gauge
(pocket type)
20-120 PSI

GAU-EX-1031
Truck tire gauge
(pocket type)
20-120 PSI

GAU-EX-1035P
GAU-EX-1035M
Dual-foot truck gauge
Delin or Metal indicator
20-150 PSI

GAU-EX-1036P
GAU-EX-1036M
Dual-foot truck gauge
Delin or Metal indicator
20-150 PSI

GAU-EX-1250
Large bore gauge
(Pocket type)
20-120 PSI

GAU-EX-1255P
GAU-EX-1255M
Large bore swivel gauge
Delin or Metal indicator
20-150 PSI

GAU-EX-1220
Standard & Large Bore
0/200 Psi Recalibratable

GAU-EX-1220PH
Same as GAU-EX-1220
With Plastic Handle

GAU-EX-1230
Standard & Large Bore
0 /160 Psi Release Valve

GAU-EX-1230PH
Same as GAU-EX-1230
But with Plastic Handle

GAU-EX-1315
Same as GAU-EX-1230
but for standard bore only

GAU-EX-1235
Standard & Large Bore
0/300 Psi Holds Pressure
Reading

GAU-EX-1235PH
Same as GAU-EX-1235
but with Plastic Handle

GAU-EX-1236
Same as GAU-EX-1235
but for standard bore only

Tools

TST-EX-1200K
Tire Technican Tool Kit

TST-EX-1016
Special large bore valve core tool. Sliding sleeve allows position grip of the core for ease of handling. 5-1/2" long

TST-EX-1018
Same as TST-EX-1018L only 6-1/2" long.

TST-EX-1021
Core Extractor

TST-EX-1018L
Large bore HEX cap tool with plastic handle for positive grip. Length 10"

TST-EX-1019
Large bore core tool. Has plastic handle for positive grip. 5-1/2" long.

TST-EX-1017
Same as TST-EX-1016 but is of heavy duty construction and is 10" long.

TST-EX-610 (9") &
TST-EX-610L (24")

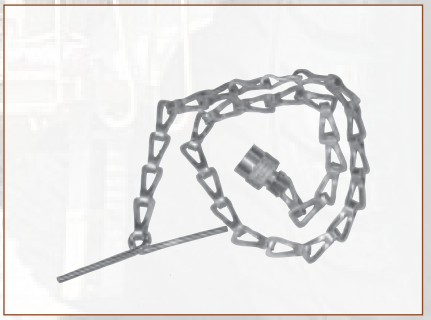

TST-EX-609LB

TST-EX-609 (10")

Valve fishing tool guides, aligns and holds valve through valve hole while mounting tire.
For standard bore valves.

TST-EX-1522
Large bore valve tool. Repairs damaged threads and removes damaged cores.

TST-EX-1525
Large bore and air water valve tool.

TST-EX-1520S
Four-way standard bore valve tool.

TST-EX-1616
Standard bore valve core tool

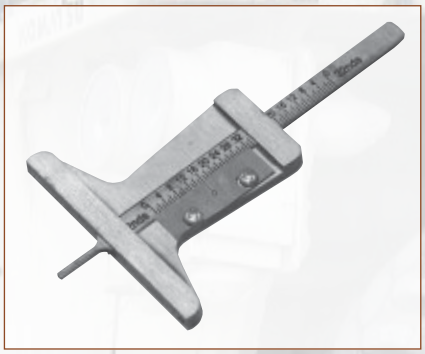

TST-EX-1420
Truck tread depth gauge (32NDS" & MM)

TST-EXLT-03
Tube deflator

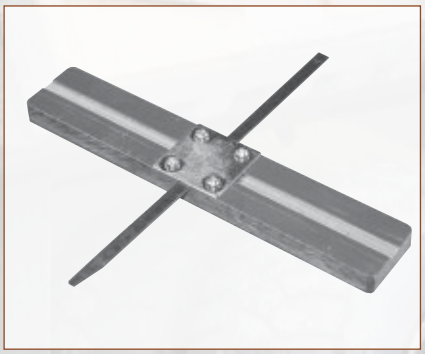

TST-EX-355
O.T.R. Tread depth gauge

TST-EX-685
Combination large bore and standard bore valve core removing tool.

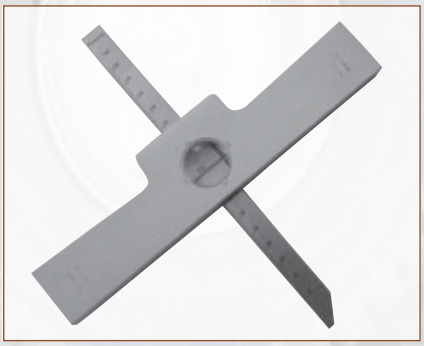

TST-EX-910
OTR Tread Depth Gauge Features magnified readings. Made of sturdy aluminum and stainless steel. Supplied in leatherette case.

TST-EX-595
Tire tread depth gauge. Calibrated 0-1" in 1/32" units

Inflators

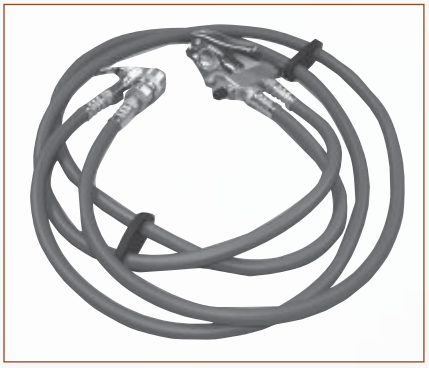

TST-EX-920
H.D. Dual Inlator with
TST-EX-4660A & TST-EX-1586C
clip on chucks

TST-EX-920/1-3
Dual Inflator
3' Hoses

TST-EX-922
H.D. Single Inflator
with TST-EX-1586 FT chuck

TST-EX-921
H.D Single Inflator
with TST-EX-4660A chucks

TST-EX-54-920
Single Inflator
90 PSI - 16" Hose

TST-EX-923
Inflator Gauge
with TST-EX-4660A chuck
Calibrated 10-50 PSI

TST-EX-924
Inflator Gauge
with TST-EX-1586FT chuck
Calibrated 10-150 PSI

EX-926
H.D Inflator Gauge
with ball valve and
TST-EX-4660A chuck

Supplied with 5' hose rated at 300 PSI. Also available in various lengths

Chucks

TST-EX-5567

TST-EX-5565

TST-EX-5566

TST-EX-565
Screw-on chuck has .482-26 internal thread and 1/2" NPT external thread.

TST-EX-1587

TST-EX-1587LB

TST-EX-1586C

TST-EX-666

Euro Style Chucks

TST-EX-1586C - Closed - 1/4" NPT
TST-EX-1586FT - Open - 1/4" NPT
TST-EX-1587C - Closed - 1/4" Barb
TST-EX-1587FT1 - Open - 1/4" Barb
TST-EX-1587FT2 - Open - 3/16" Barb
TST-EX-1587LB - Closed Large Bore 1/4" Barb

TST-EX-1586FT

TST-EX-366, TST-EX-666 and
TST-EX-366 Lock-on air chucks

TST-EX-6569LO (Lock On)
Dual-foot air chuck 6" long for hard to reach dual-wheel truck and bus tires.

TST-EX-4660A (Large Bore)
TST-EX-5560 (Standard Bore)
Clip-on chuck securely locks when sleeve is pushed forward.

"O" Rings

Part No.	RIM	Diam.
VLH-OR-217	17"	1/4"
VLH-OR-219	19"	1/4"
VLH-OR-220TG	20"	1/4"
VLH-OR-221	21"	1/4"
VLH-OR-224TG	24"	1/4"
VLH-OR-225TG	25"	1/4"
VLH-OR-319T	19"	3/8"
VLH-OR-320T	20"	3/8"
VLH-OR-321T	21"	3/8"
VLH-OR-324T	24"	3/8"
VLH-OR-325T	25"	3/8"
VLH-OR-329T	29"	3/8"
VLH-OR-333T	33"	3/8"
VLH-OR-335T	35"	3/8"
VLH-OR-339T	39"	3/8"
VLH-OR-343T	43"	3/8"
VLH-OR-345T	45"	3/8"
VLH-OR-349T	49"	3/8"
VLH-OR-351T	51"	3/8"
VLH-OR-357T	57"	3/8"
VLH-OR-445T	45"	1/2"
VLH-OR-449T	49"	1/2"
VLH-OR-451T	51"	1/2"
VLH-OR-457T	57"	1/2"
VLH-OR-463T	63"	1/2"

"L" Rings

Part No.	Description
VLH-LR-25	25" L-RING SEAL
VLH-LR-29	29" L-RING SEAL
VLH-LR-33	33" L-RING SEAL
VLH-LR-35	35" L-RING SEAL
VLH-LR-39	39" L-RING SEAL
VLH-LR-45	45" L-RING SEAL
VLH-LR-49	49" L-RING SEAL
VLH-LR-51	51" L-RING SEAL
VLH-LR-57	57" L-RING SEAL
LR-63	63" L-RING SEAL

Especially compounded for sealing tire beads of graders, earth-movers, off-the-road and transportation equipment. All "O" rings are individually marked and easy to read.

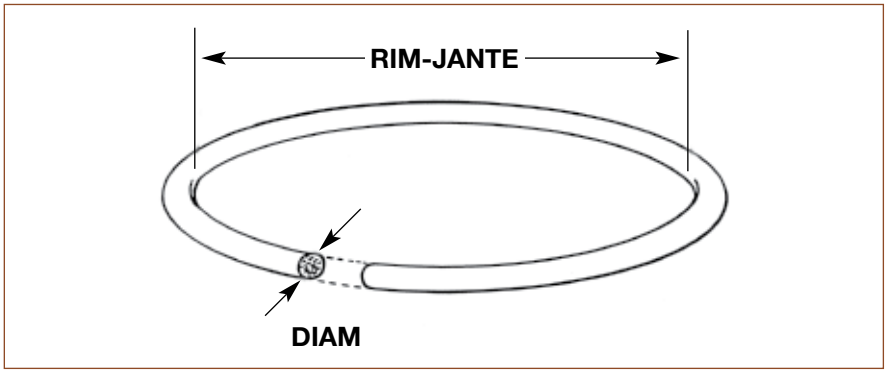

The L-RING seal is designed to ensure an improved air seal where the tire bead meets the Rim and flange. They are of particular benefit to the radial tires.

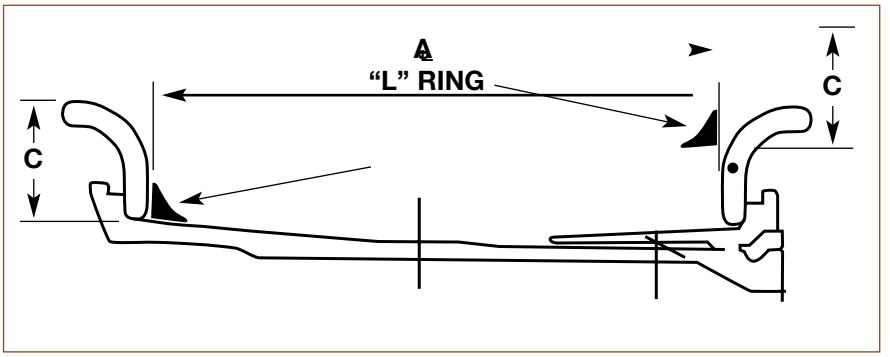

Grommets

Part No.	RIM	Application
VLH-M-272	RG-7	VLH-EX-670, 670P, 672, 678, 679
VLH-EX-1270G	RG-15	All VLH-EX-1296 Series
VLH-M-236	RG-16	VLH-EXJ-690 Series, VLH-EX-9002, VLH-9004
VLH-M-165	RG-22	VLH-EX-1300, 1302, VLH-EXT-81, 82, VLH-EXDS-210
VLH-EXRG-46	RG-46	VLH-EX-509, 510, 511
VLH-EXRG-48	RG-48	VLH-EX-513, 515
VLH-EXRG-60	RG-60	All VLH-EX-540 Series
VLH-EX-1350G		VLH-EX-1305 & VLH-EXX-381
VLH-EX-570GV		Viton Grommet - VLH-EX-1296 Series
VLH-EX-126		SLB Swivel Connectors
VLH-EX-127		VLH-EXR-520 - VLH-EXR-521
VLH-111-BUNA-70		VLH-SXL-1050
VLH-118-BUNA-70		SXL Swivel Connectors
VLH-116V		Viton "O" RINGS - VLH-EX-1298 Series

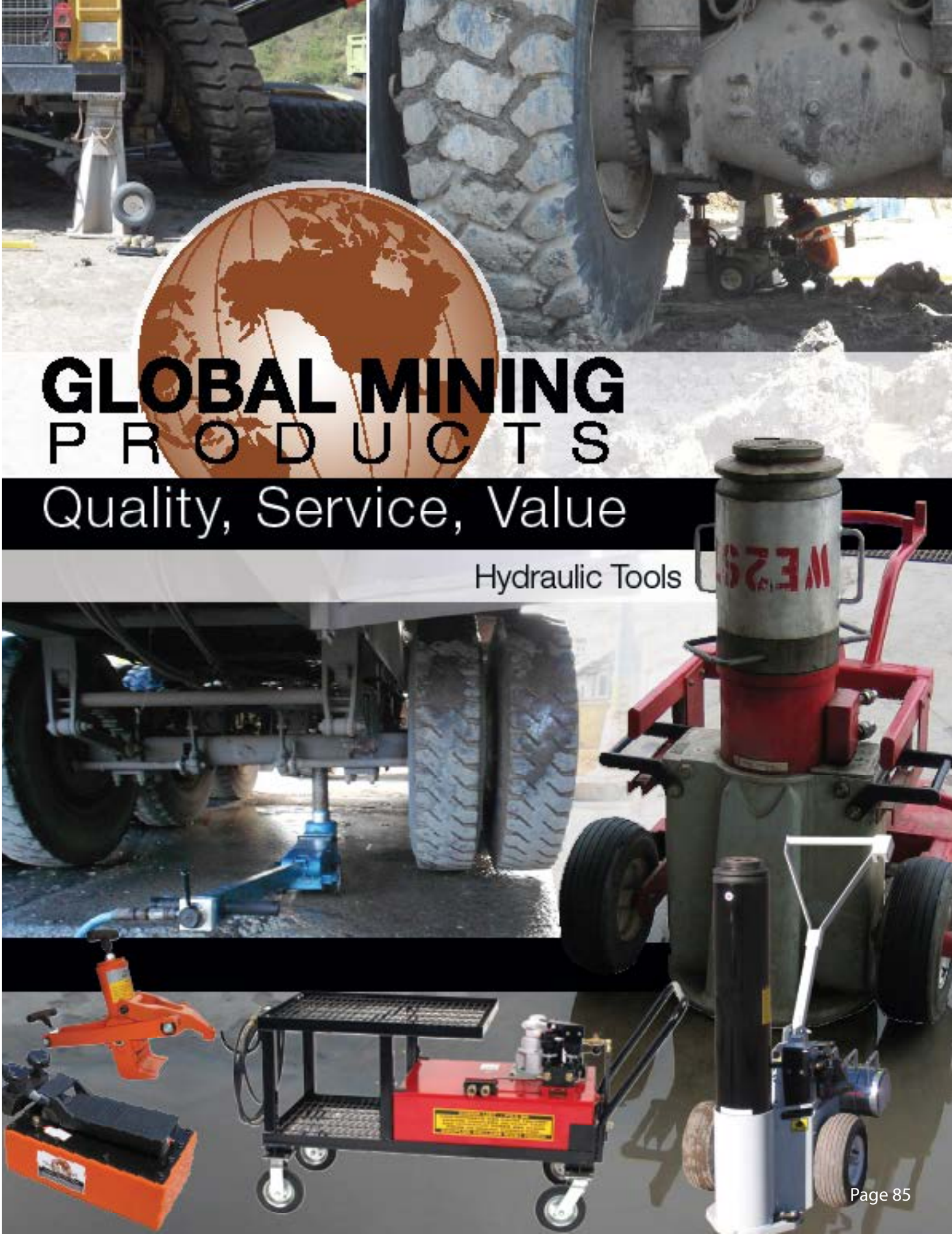
GLOBAL MINING
PRODUCTS
Quality, Service, Value
Hydraulic Tools

Modular Jack Systems

The RIGHT Jack for the RIGHT Job!

FEATURES:

- Air or Electric driven Hydraulic Pump Modules.
- 60, 100 and 175 Ton capacities.
- 13" thru 24" strokes. Custom strokes & retracted heights are available.
- With Load Holdings Rings, the Lift Module mechanically supports up to 2½ times its rated capacity.
- Extensions are available to increase the effective retracted height of the Lift Module up to an additional 20".
- Swivel Saddle reduces the adverse effects of angled jacking surfaces up to 5º.
- Lift Module may be used in horizontal position to "push".

More Power and Productivity

- Featuring a manifold which allows you to operate 2 Lift Modules with a single pump.
- Once load is lifted, the pump may be disconnected & used in another application.

Global Mining Products Inc | Ph: 877.576.2855 | Fax: 877.576.2854

A single Pump Module can be used with multiple Lift Modules.
The Modular Jack System ensures you always have the right jack for the right job!

Pump Module Required	Lift Module Part No.	Description	Retracted Height
Air/Hydraulic Pump w/H60 p/n: JCK-PA60-H60	JCK-L60-13	60 Ton 13" Stroke	21"
	JCK-L60-16	60 Ton 16" Stroke	25"
	JCK-L60-24	60 Ton 24" Stroke	31"
Air/Hydraulic Pump w/H100 p/n: JCK-PA60-H100	JCK-L100-16	100 Ton 16" Stroke	27"
	JCK-L100-18	100 Ton 18" Stroke	29"
	JCK-L100-24	100 Ton 24" Stroke	33"
Air/Hydraulic Pump w/H175 p/n: JCK-PA175-H175	JCK-L175-13	175 Ton 13" Stroke, w/ swivel saddle	30"
	JCK-L175-15	175 Ton 15" Stroke, w/ swivel saddle	32"
	JCK-L175-17	175 Ton 17" Stroke, w/ swivel saddle	34"
	JCK-L175-24	175 Ton 24" Stroke, w/ swivel saddle	41"

NOTE: Pump Carts can be substituted for Power Modules
** Additional Lifting Capacity Available upon request

BlackJack Hydraulic Jacking System

- 60 & 100 Ton Capacity
- Balanced For Easy Maneuverability
- Pneumatic Tires
- Solid Steel Frame
- Aluminum Load Holding Rings & Extensions - Stored On Jack
- Easy Maintenance
- Unitized design situations where the versatility of a Modular Jack is not required
- Same proven design characteristics and components as the Modular Jack system
- With Load Holding Rings, can mechanically support up to 2.5 times its rated capacity
- Extensions available to increase the effective retracted height up to an additional 20"
- Optional Swivel Saddle reduces the adverse effects of angled surfaces up to 5°

Part No.	Description	Retracted Height
JCK-E60-13	60 Ton 13" Stroke [Electric]	21"
JCK-A60-13	60 Ton 13" Stroke [Air]	21"
JCK-E60-16	60 Ton 16" Stroke [Electric]	25"
JCK-A60-16	60 Ton 16" Stroke [Air]	25"
JCK-E100-16	100 Ton 16" Stroke [Electric]	27"
JCK-A100-16	100 Ton 16" Stroke [Air]	27"
JCK-E100-18	100 Ton 18" Stroke [Electric]	29"
JCK-A100-18	100 Ton 18" Stroke [Air]	29"

** Additional Lifting Capacity Available upon request

Jack Stands

- 160,000 Lbs. capacity.
- 6" extension available for 37" height.
- Flip up wheels to prevent trip hazard.
- 10" x 10" replaceable rubber wear pad.
- Easy to position with removable handle.

Part No.	Description
JS-M80-41	Jack Stand 80 Ton
JS-M120-57	Jack Stand Assembly 120 Ton - 57" Tall
JS-M120-24	Jack Stand Assembly 120 Ton - 24" Tall
JS-M120-40	Jack Stand Assembly 120 Ton - 40" Tall
JSE-M80-10	Extension, Jack Stand - 10"
JSE-M120-6	Extension 6" 120 Ton
JSE-M120-10	Extension 10" 120 Ton
JSE-M120-12	Extension 12" 120 Ton

Pump Carts

Part No.	Description
JCK-PCE90	Pump Cart, Electric
JCK-PCA90	Pump Cart, Air
JCK-PCA90-RT	Pump Cart, Air - Rough Terrain

- Cart provides a convenient way to transport and operate tools.
- Large built in storage racks to store jack accessories and hoses.
- Available with easy rolling standard wheels or in a rough terrain version with large, low rolling resistance tires.
- A versatile and convenient way to provide hydraulic power to "other" 10,000 psi tools (single or double acting tools)
- Custom racking and cabinets are available for unique applications.
- Very economical alternative to purchasing an additional unitized pump and lift module.

Component Handler

[JCK-CH-5000]

Assists in the removal and installation of:

- Belly Pans
- Tanks
- Transmissions
- Pumps
- Differentials
- Crankcases

Features

- Large wheels provide easy maneuvering.
- Independent patented locking system for maximum safety
- Tow loops front and back
- Head tilt +/- 5° and traverse of 4"

Part No.	Description
JCK-SS60	Swivel Saddle 60 Ton
JCK-SS100	Swivel Saddle 100 Ton
JCK-SS120	Swivel Saddle 120 Ton
JCK-SS175	Swivel Saddle 175 Ton

**Mandatory with extensions.

Swivel Saddle

Swivel Saddle will compensate for a sloped jacking point - up to 5°, to reduce side loading stress.

The BullDog

A Lift Module Transporter

[JCK-BD]

SAFETY

The proper capacity and height Lift Modules can be easily positioned under 'difficult to access' jacking points

VERSATILITY

Maneuver 60, 100, 120 and 175 ton capacity Lift Modules

VALUE

With the Modular Jack System you require fewer jacks to cover all your lifting needs

Global Mining Products Inc | Ph: 877.576.2855 | Fax: 877.576.2854

Part No.	Description
JCK-LHR60-2	Load Holding Ring 60 Ton - 2"
JCK-LHR60-3	Load Holding Ring 60 Ton - 3"
JCK-LHR60-5	Load Holding Ring 60 Ton - 5"
JCK-LHR60-13	LHR 6013 Set - (2) 2", (1) 3" & (1) 5"
JCK-LHR60-16	LHR 6016 Set - (2) 2", (1) 3" & (2) 5"
JCK-LHR60-24	LHR 6024 Set - (2) 2", (1) 3" & (3) 5"
JCK-LHR100-2	Load Holding Ring 100 Ton - 2"
JCK-LHR100-3	Load Holding Ring 100 Ton - 3"
JCK-LHR100-5	Load Holding Ring 100 Ton - 5"
JCK-LHR100-16	LHR 10016 Set - (2) 2", (1) 3" & (1) 5"
JCK-LHR100-18	LHR 10018 Set - (2) 2", (1) 3" & (2) 5"
JCK-LHR100-24	LHR 10024 Set - (2) 2", (1) 3" & (3) 5"
JCK-LHR175-5	Load Holding Ring 175 Ton - 5"
JCK-LHR175-3	Load Holding Ring 175 Ton - 3"
JCK-LHR175-2	Load Holding Ring 175 Ton - 2"
JCK-LHR175-13	LHR 17513 Set - (2) 2", (1) 3" & (1) 5"
JCK-LHR175-17	LHR 17517 Set - (1) 2", (3) 3" & (1) 5"
JCK-LHR175-24	LHR 17524 Set - (1) 2", (2) 3" & (3) 5"

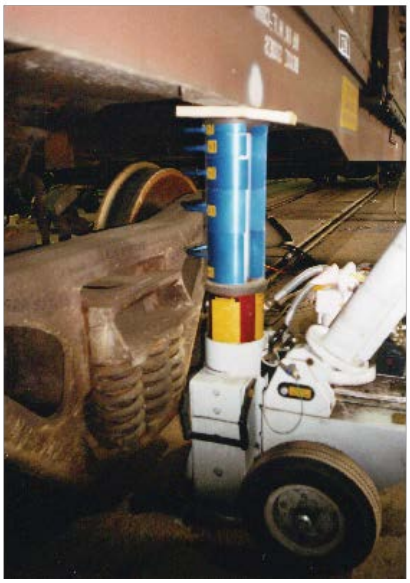

Load Holding Rings

- Provides mechanical support.
- Welded on handles
- Various heights for flexibility.
- Internal Bevel reduces spreading

Extension Adaptors & Load Holding Ring Features

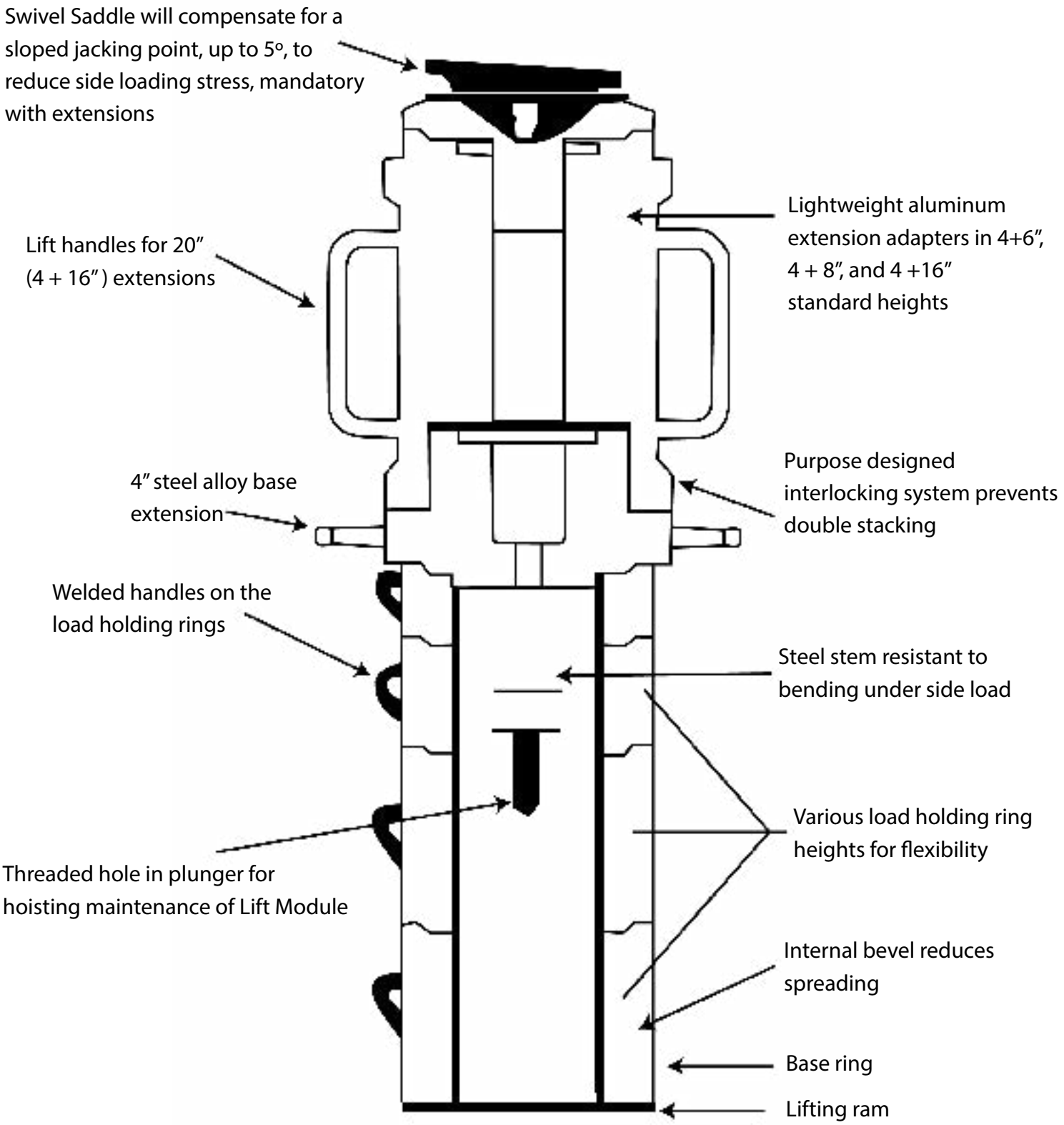

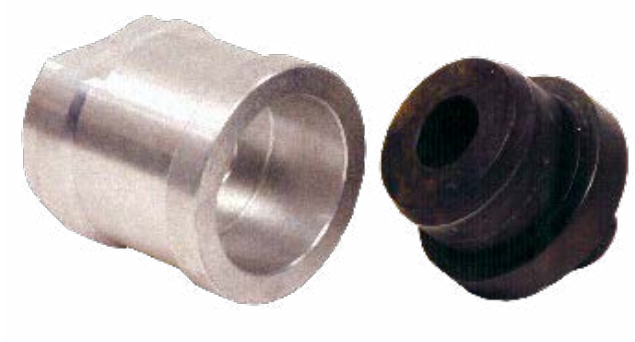

Extensions & Base

- Light weight aluminum extension adapters
- Available in 4+4", 4+8" 4+16" heights.
- Lifting handles for 20" (4+16") extensions.
- 4" Steel Alloy Base extension.
- Large diameter interlocking segments for added strength.

Part No.	Description
JCK-EXB60	Extension, Steel Base 60 Ton
JCK-EX60-4	Extension Adapter 60 Ton 4+4"
JCK-EX60-8	Extension Adapter 60 Ton 4+8"
JCK-EX60-16	Extension Adapter 60 Ton 4+16"
JCK-EXB100	Extension, Steel Base 100 Ton
JCK-EX100-4	Extension Adapter 100 Ton 4+4"
JCK-EX100-8	Extension Adapter 100 Ton 4+8"
JCK-EX100-16	Extension Adapter 100 Ton 4+16"
JCK-EXB120	Extension, Steel Base 120 Ton
JCK-EX120-4	Extension Adapter 120 Ton 4+4"
JCK-EX120-8	Extension Adapter 120 Ton 4+8"
JCK-EX120-16	Extension Adapter 120 Ton 4+16"
JCK-EXB175	Extension, Steel Base 175 Ton
JCK-EX175-4	Extension Adapter 175 Ton 4+4"
JCK-EX175-8	Extension Adapter 175 Ton 4+8"
JCK-EX175-16	Extension Adapter 175 Ton 4+16"

**Steel base required for use with all extensions.

Suspension Adapters

Part No.	Description
JCK-RSA120-830E	Rear Suspension Adapter K-830E (120 Ton Lift Module)
JCK-RSA175-830E	Rear Suspension Adapter K-830E (175 Ton Lift Module)
JCK-RSA175-930E	Rear Suspension Adapter K-930E (175 Ton Lift Module)
JCK-FSA100	Front Suspension Adapter (100 Ton Lift Module)
JCK-FSA120/175	Front Suspension Adapter (120175 Ton Lift Module)

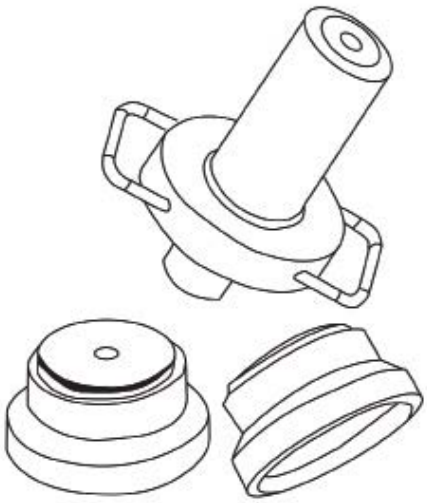

HeavyLift High Tonnage Jacks

Designed for Mining, Forestry & Construction Industries

Available in a wide and varies range of heavy-duty lift jacks suitable for all heavy-duty vehicles from the shop to underground mining, construction and railroad industries the heavy duty lifts continue to meet or exceed all the rugged demands of all heavy industrial applications.

NOTE: Capacity requirements exceeding 350 tons can be manufactured on a "made to order" basis.

Global Mining Products Inc | Ph: 877.576.2855 | Fax: 877.576.2854

Part No.	Description
JCK-HJA-50-16	Heavy Lift 50Ton 16" Stoke (Air)
JCK-HJE-50-16	Heavy Lift 50Ton 16" Stoke (Electric)
JCK-HJA-50-25	Heavy Lift 50Ton 25" Stoke (Air)
JCK-HJE-50-25	Heavy Lift 50Ton 25" Stoke (Electric)
JCK-HJA-60-16	Heavy Lift 60Ton 16" Stoke (Air)
JCK-HJE-60-16	Heavy Lift 60Ton 16" Stoke (Electric)
JCK-HJA-60-25	Heavy Lift 60Ton 25" Stoke (Air)
JCK-HJE-60-25	Heavy Lift 60Ton 25" Stoke (Electric)
JCK-HJA-80-16	Heavy Lift 80Ton 16" Stoke (Air)
JCK-HJE-80-16	Heavy Lift 80Ton 16" Stoke (Electric)
JCK-HJA-80-25	Heavy Lift 80Ton 25" Stoke (Air)
JCK-HJE-80-25	Heavy Lift 80Ton 25" Stoke (Electric)
JCK-HJA-100-18	Heavy Lift 100Ton 18" Stoke (Air)
JCK-HJE-100-18	Heavy Lift 100Ton 18" Stoke (Electric)
JCK-HJA-100-27	Heavy Lift 100Ton 27" Stoke (Air)
JCK-HJE-100-27	Heavy Lift 100Ton 27" Stoke (Electric)
JCK-HJA-100-38	Heavy Lift 100Ton 38" Stoke (Air)
JCK-HJE-100-38	Heavy Lift 100Ton 38" Stoke (Electric)
JCK-HJA-125-18	Heavy Lift 125Ton 18" Stoke (Air)
JCK-HJE-125-18	Heavy Lift 125Ton 18" Stoke (Electric)
JCK-HJA-125-27	Heavy Lift 125Ton 27" Stoke (Air)
JCK-HJE-125-27	Heavy Lift 125Ton 27" Stoke (Electric)
JCK-HJA-125-38	Heavy Lift 125Ton 38" Stoke (Air)
JCK-HJE-125-38	Heavy Lift 125Ton 38" Stoke (Electric)
JCK-HJA-150-18	Heavy Lift 150Ton 18" Stoke (Air)
JCK-HJE-150-18	Heavy Lift 150Ton 18" Stoke (Electric)
JCK-HJA-150-27	Heavy Lift 150Ton 27" Stoke (Air)
JCK-HJE-150-27	Heavy Lift 150Ton 27" Stoke (Electric)
JCK-HJA-150-38	Heavy Lift 150Ton 38" Stoke (Air)
JCK-HJE-150-38	Heavy Lift 150Ton 38" Stoke (Electric)
JCK-HJA-150-42	Heavy Lift 150Ton 42" Stoke (Air)
JCK-HJE-150-42	Heavy Lift 150Ton 42" Stoke (Electric)
JCK-HJA-200-27	Heavy Lift 200Ton 27" Stoke (Air)
JCK-HJE-200-27	Heavy Lift 200Ton 27" Stoke (Electric)
JCK-HJA-200-38	Heavy Lift 200Ton 38" Stoke (Air)
JCK-HJE-200-38	Heavy Lift 200Ton 38" Stoke (Electric)
JCK-HJA-200-42	Heavy Lift 200Ton 42" Stoke (Air)
JCK-HJE-200-42	Heavy Lift 200Ton 42" Stoke (Electric)
JCK-HJA-250-27	Heavy Lift 250Ton 27" Stoke (Air)
JCK-HJE-250-27	Heavy Lift 250Ton 27" Stoke (Electric)
JCK-HJA-250-38	Heavy Lift 250Ton 38" Stoke (Air)
JCK-HJE-250-38	Heavy Lift 250Ton 38" Stoke (Electric)
JCK-HJA-250-42	Heavy Lift 250Ton 42" Stoke (Air)
JCK-HJE-250-42	Heavy Lift 250Ton 42" Stoke (Electric)
JCK-HJA-300-27	Heavy Lift 300Ton 27" Stoke (Air)
JCK-HJE-300-27	Heavy Lift 300Ton 27" Stoke (Electric)
JCK-HJA-300-33	Heavy Lift 300Ton 33" Stoke (Air)
JCK-HJE-300-33	Heavy Lift 300Ton 33" Stoke (Electric)
JCK-HJA-350-27	Heavy Lift 350Ton 27" Stoke (Air)
JCK-HJE-350-27	Heavy Lift 350Ton 27" Stoke (Electric)
JCK-HJA-350-33	Heavy Lift 350Ton 33" Stoke (Air)
JCK-HJE-350-33	Heavy Lift 350Ton 33" Stoke (Electric)

HeavyLift Jack Options

Cribbing: Safety Cribbing allows operators to secure the load in the event of a malfunction. A cribbing rack for storage of the cribbing pieces is available on all jack models

Foam Tires: Provide additional durability to the jack eliminating potential downtime.

Hand Guards: Provide the operator with additional hand protection

Handle Tilt: Useful for jacks operating on low-profile or subterranean machines. Allows the operator to better position the jack under the equipment being worked on.

Line Remote: Allows the operator to operate the jack at a safe distance from the load.
option is included on all larger jack models.

LED Lighting: Allows the operator to better position the jack under the desired lift point. Ideal for working in dimly lit areas or subterranean machines

Pressure Gauge: Enable the measuring of PSI (BAR) or the amount of tonnage being lifted.

HeavyLift Extensions

Each HeavyLift High Tonnage Jack comes complete with (1) of the following extensions:

- 6"(152mm)
- 8"(203mm)
- 10"(254mm)
- 12"(305mm)
- 16"(406mm)
- 18"(457mm)

Heavy Lift Safety Stands

Designed for Mining, Forestry, Construction & Railway Industries

Available in a range of tonnage capacities; a variety of extensions heights are available and can be purchased separately to turn the "Fixed Stand" in to an "Adjustable Stand".

FEATURES:

- Quick and easy to install under the load using the transporter
- Sturdy and rugged construction
- Certified

Part No.	Description
JCK-20002	60 Ton Fixed Stand, 31"
JCK-20004	Transporter

When working on heavy machinery you need incredibly sturdy and dependable equipment.
Our Adjustable Heavy Duty Stands maintain a safe working environment
Construction: Lightweight, heavy-duty aluminum resists abuse from oil, salt and weather

Part No.	Description
HDS-15-22-ADJ	15 Ton Adjustable Boom Stands 16" - 22"
HDS-15-29-ADJ	15 Ton Adjustable Boom Stands 20" - 29"
HDS-25-22-ADJ	Heavy Duty Stand 25 Ton Adjustable 16" - 22" (ACME Screw Type)
HDS-25-29-ADJ	Heavy Duty Stand 25 Ton Adjustable 20" - 29" (ACME Screw Type)

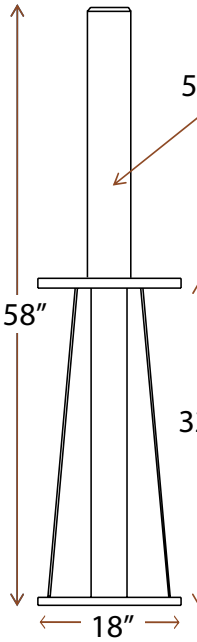

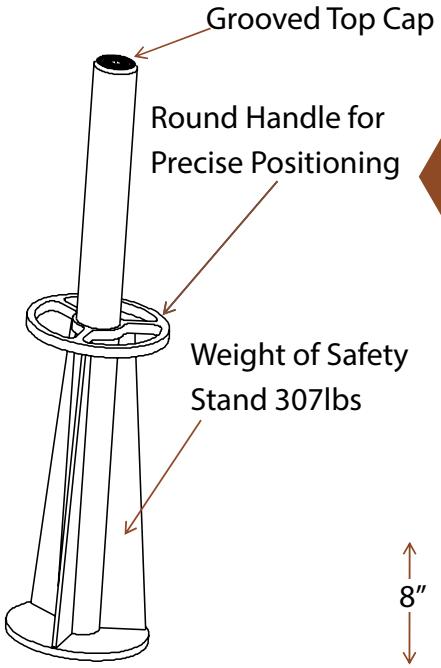

60 Ton Fixed Safety Jack

[JCK-20006]

- Capacity: 60 Tons
- Height: 58 in
- Base: 0.75″ Material

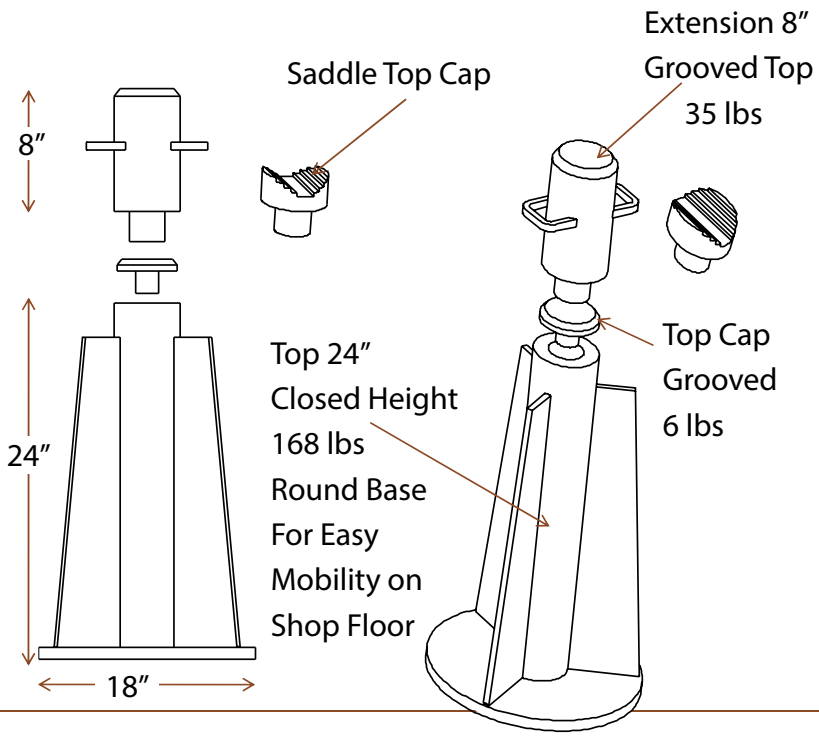

60 Ton, Adjustable Safety Jack 24″ - 32″

[JCK-20007]

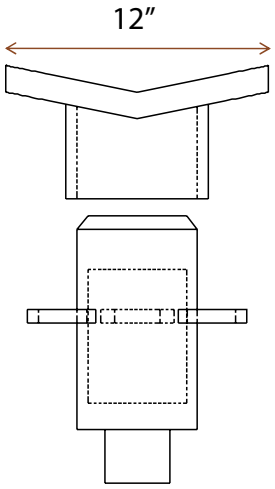

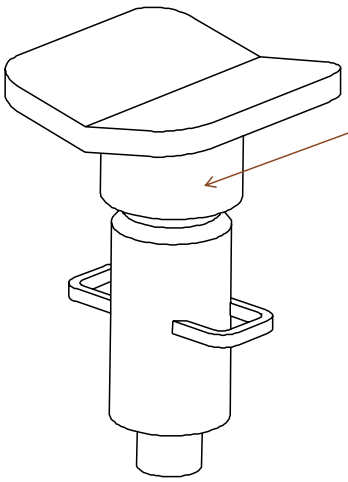

Fits of the top of the extension

60 Ton Heavy Lift Saddle Cap

[JCK-20008]

- 12″x1″ Thick Top Cap Made To Fit Over The Extension or Stand Top To Distribute The Load Over A Greater Area
- 5.5″ Diameter 5052 lbs PSI
- 12″ Load Cap 876 lbs PSI

Single Stage Jacks

- Single stage
- Polished chrome piston rod.
- Quick "no-load" response - gets the job done quickly
- Provide quick and effortless lifts
- Ergonomic T Handle allows quick and easy positioning

Model	Capacity	Height		Handle Length	Weight
		Min	Max		
JCK-20010	80 Ton	250 mm	370 mm	1300mm	95 kg
JCK-20011	100 Ton	405 mm	705 mm	1300mm	125 kg

Bead Breakers

Integrated design, Alloy steel claw and chromed piston and ram enhance the strength of overall performance and extends service life.

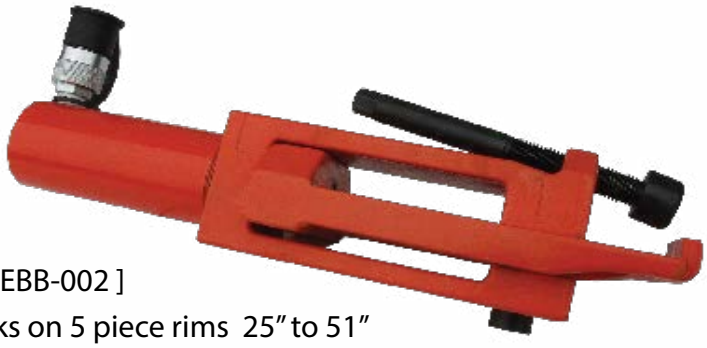

[HT-EBB-002]
Works on 5 piece rims 25" to 51"
with pry bar bead loosening pockets

[HT-EBB-001]
Works on all single, two and three piece agricultural and small OTR tires/rims, including some newer wheel types

FEATURES

- Durable Anti-Corrosion Enviro-Friendly Paint
- Up To 5 Inch Stroke
- Self Retracting

[HT-10104]

Air / Hydraulic Pumps

Part No.	Pressure Rating (psi)	Effective Oil Capacity (cu.in)	Flow (cu.in/min)		Dimensions (in.)			Oil Tank Material	Operating Manner	Weight (lbs)
			No Load	Load	L	W	H			
HP-EPC-002	10000	98	49.5	7.6	10.3	5.3	7.3	Alloy Aluminum	Foot pedal	19
HP-EPC-003	10000	275	49.5	7.6	12.5	7	7.5	Steel	Foot pedal	28
HP-EPC-008	10000	98	49.5	7.6	10.3	5.3	7.3	Alloy Aluminum	Remote control	25

Features

- Can be used with a variety of hydraulic cylinders, presses or other hydraulic tools.
- Knob ventilation valve provides better operation and protection.
- Operating air pressure between 85-145 psi.
- Air inlet 1/4" NPT, Oil outlet 3/8" NPT.
- Internal load limiting device to avoid overload.
- Air exhaust muffler allows quiet operation of air motor.
- Air and oil filter to reduce risk of damage from containminants
- A variety of sizes can be chosen, with plastic, aluminum or steel oil reservoirs.

Hydraulic Hose
Available in various lengths

[HP-EPC-003-1]
Same as HP-EPC-003 but supplied with dual control needle valve & two output hoses. One pump can run two hydraulic tools at the same time.

Manifold
[HPT-EAC-402]

Hydraulic Cylinders

Features

- Fully complies with ASME B-30.1. High Strength alloy steel for durability ensures double-safety.
- Special treatment on cylinder internals for durability.
- Collar threads, plunger threads and base mounting holes allows easy fixturing.
- Heavy-duty plunger return spring.
- Internal load limiting device to avoid overload.
- High quality 3/8-18NPT quick couplers.
- Environment-friendly paint provides a durable anti-corrosion finish.

Cylinder Capacity @700bar	Stroke		Model	Collapsed Height A		Extended Height B		Weight	
	(in)	(mm)		(in)	(mm)	(in)	(mm)	(lbs)	(kgs)
10	0.98	25	HC-ES-101	3.54	90	4.53	115	3.96	1.8
10	2.13	54	HC-ES-102	4.76	121	6.89	175	5.06	2.3
10	4.13	105	HC-ES-104	6.73	171	10.87	276	7.26	3.3
10	6.14	156	HC-ES-106	9.76	248	15.91	404	9.68	4.4
10	7.99	203	HC-ES-108	11.73	298	19.72	501	11.88	5.4
10	10.12	257	HC-ES-1010	13.74	349	23.86	606	14.08	6.4
25	6.26	159	HC-ES-258	10.75	373	17.01	432	22	10

Aluminum Hydraulic Cylinders

Features

- Low weight, easy to carry.
- High-strength aluminum material with special treatment provides wear and corrosion resistance.
- For use in extreme environments.
- Single acting, spring return.
- Comes complete with valve and aluminum base.

Cylinder Capacity @700bar	Stroke		Model	Collapsed Height A		Extended Height B		Weight	
	(in)	(mm)		(in)	(mm)	(in)	(mm)	(lbs)	(kgs)
30 Ton	6.14	156	HC-ESA-306	11.34	288	17.48	444	14.96	68
55 Ton	6.10	155	HC-ESA-556-1	10.75	273	16.85	428	24.42	11.1
100 Ton	6.26	159	HC-ESA-1006-1	11.75	298.5	18.01	457.5	50.16	22.8

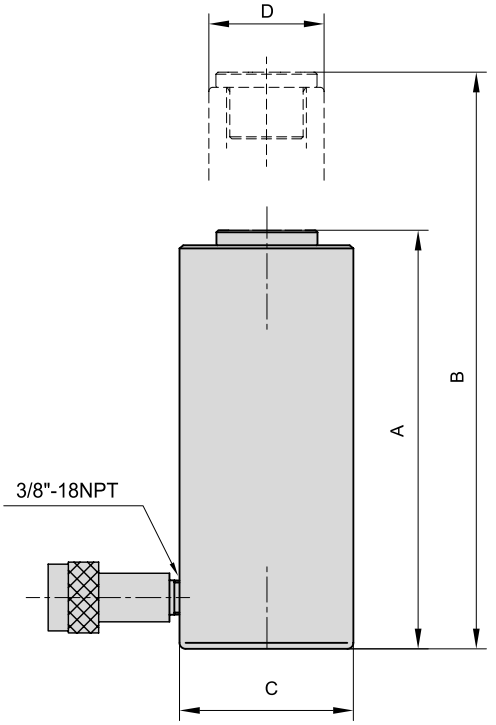

Single Acting Low Height Cylinders

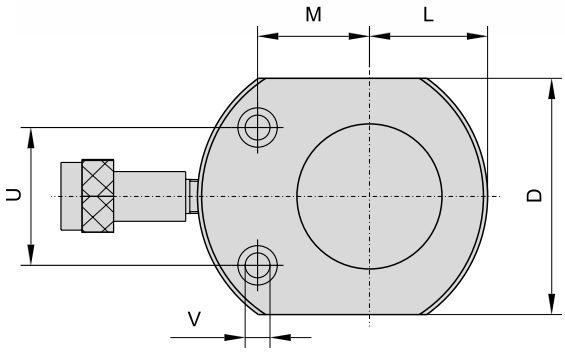

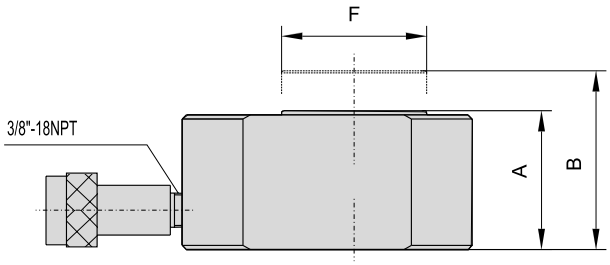

Cylinder Capacity @700bar	Stroke		Model	Collapsed Height A		Extended Height B		Weight	
	(in)	(mm)		(in)	(mm)	(in)	(mm)	(lbs)	(kgs)
5 Ton	0.24	6	HC-ESL-50	1.30	33	1.54	39	2.2	1
10 Ton	0.47	12	HC-ESL-100	1.69	43	2.13	54	3.08	1.4
75 Ton	0.63	16	HC-ESL-750	3.15	80	3.74	95	25.08	11.4
100 Ton	0.63	16	HC-ESL-1000	3.39	86	4.57	116	57.86	26.3

Single Acting Hollow Center Cylinders

Cylinder Capacity @700bar	Stroke		Model	Collapsed Height A		Extended Height B		Weight	
	(in)	(mm)		(in)	(mm)	(in)	(mm)	(lbs)	(kgs)
20 Ton	1.9	49	HC-ESH-202	6.4	162	8.3	211	16.94	7.7
20 Ton	6.1	155	HC-ESH-206	12.0	306	18.1	461	31.02	41.1

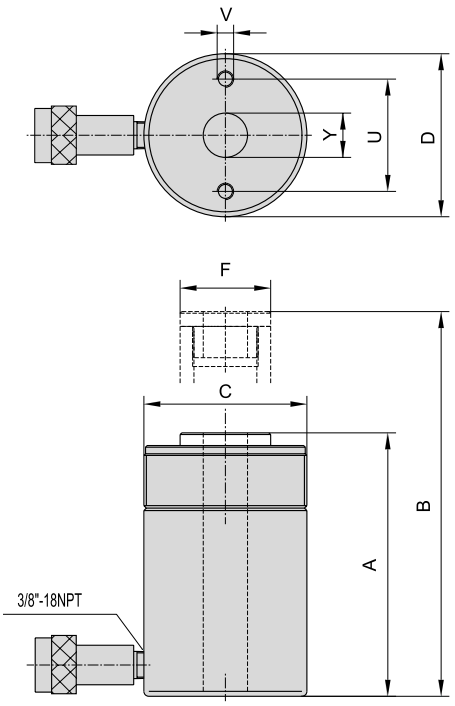

GLOBAL MINING PRODUCTS

Quality, Service, Value

Tire Repair Systems

Tire Repair Systems

The flexible method of securely strapping heat pads and air bags allows our vulcanising equipment to conform perfectly with:

- Radial & Bias Ply
- Wide base
- Terra
- Low Profile
- Skidder
- Floatation

FEATURES:
Combining simultaneous pressure and heat on both the inside and outside of the injury area results in a first class cure with maximum patch adhesion.

The plug and patch stages of tire repair are cured at the same time, greatly reducing the time the tire is out of service during repair.

Air bags are fitted with a blue elastic window allowing the bladder to expand more easily into the side wall area ensuring even pressure across the patch.

By avoiding the use of heavy metal frames and supports, the vulcanising system can condense down to a very small volume when not in use. Combined with its low weight the system can be easily stored and transported at little cost.

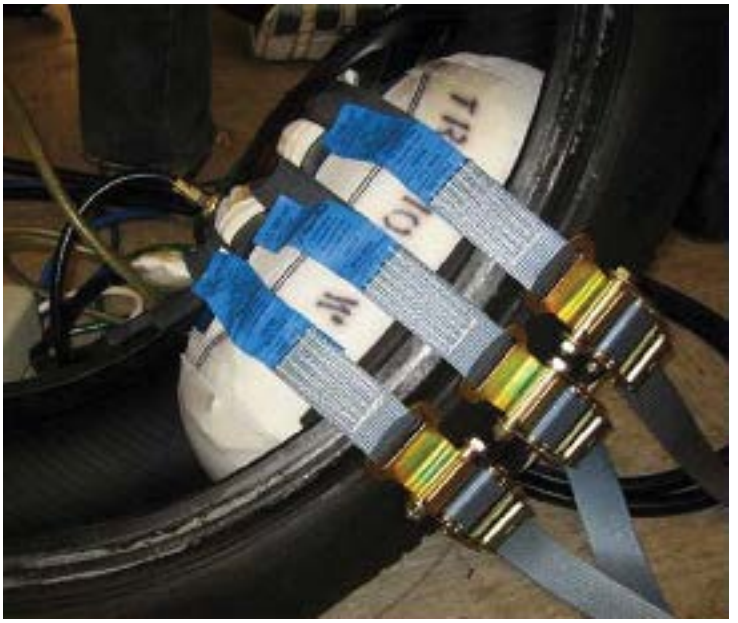

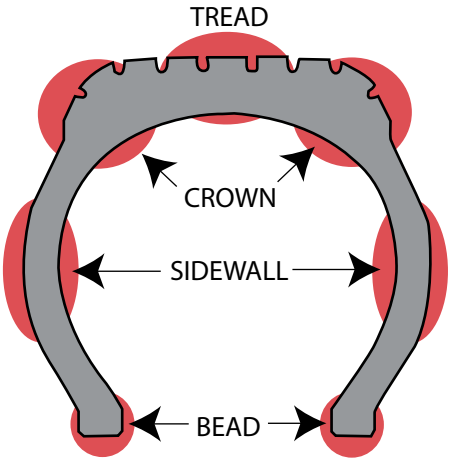

Control Panel M100

Tractor / Wide Base	Tire Section	Cylinder Bag	Inside Flat Bag	Inside Heat Pad		Outside Heat pad	External Pack With Flat Bag and Strap
				Bias	Radial		
14.4-24 to 16.9-38	13.00 to 17.5	TR1315/20W		M2519H	M3015H	TR2621H	TR2621E with TROC5XL Straps
18.4-34 to 20.8-42	18.00 to 21.00	M1721/24W		M2519H or M2626H	M3015H	TR2621H	TR2621E with TROC5XL Straps
23.1-26 to 30.5-32	23.5 to 26.5	M1721/24W	M4824W	M2519H or M2626H	M3015H	TR2621H	TR2621E with TROC5XL Straps
25/65-25	27.00 to 29.5	M1721/24W	M4824W M5432W	M2519H or M2626	M3015H or M4220H	TR2621H	TR2621E with TROC5XL Straps
35/65-33 to 45/65-45	30.00 to 37.5	M2732/32W	M5432W	M2626H or M3132H	M4220H or M4224H	M2626H or M3132H	M4832E with M45/6/7 (1HG) 6 Straps
49.5/85-57 to 50/65-51	40.00	M3842/32W		M3132H or M2626H	M4220H or M4224H or M4824H or M5224H	M2626H or M3132H	M4832E with M45/6/7 (1HG) 6 Straps
46/90-57		M3842/32W	M5432W				
50/80-57 to 55/80-57		M4447/32W					
53.5/85-57 53.5/85-63 55.5/80-57 55.5/85-57 55.5/85-63		M4447/32W	M7532H or M9032H	M3132H or M2626H	M4220H or M4224H or M4824H or M5224H	M2626H or M3132H	M4832E with M45/6/7 (1HG) 6 Straps

Tire Trees

TSE-10048 - 57″ Tire Tree
TSE-10049 - Multi Size 21″ - 51″

Features:
Steering Control (Varies flow to each motor)
- Electric Forward/Reverse Switch
- Safety Deadman Switch
- Hydraulic Drive Motors
- 10″ Molded rubber steel wheels
- Dual Caster Wheels
- Adjustable leveling/anchor pads (4 corners)

TSE-10048

TSE-10049

Extruder Guns

Guaranteeing Total Elimination of Air.

Specially designed for hole filling, reduces working times substantially and offers perfect adherence and uniform repairs guaranteeing total elimination of air.

Part No.	Description
TRT-685-220	Bosch 685 Extruder Gun, 220v, 550 watt, 18Kg/h rubber production
TRT-686-220	Bosch 686 Extruder Gun, 220v, 550 watt, 24 Kg/h rubber production

ManLifts [Part No. TSE-Manlift-1]

Features:

- Metered ascent and descent.
- Adjustable speed.
- Deck kick plate 4" from deck surface (safety feature).
- Will not lower in the event of a hose rupture (locked by a velocity valve).
- Aluminum deck surface.
- Handrail can be supplied to suit your needs (standard back and side rail).
- Tool boxes supplied for impact sockets and or tool holsters.
- Hinge plates can be supplied to suit your requirements.
- Deck edges can be supplied with alternating yellow & black diagonal stripes.
- Compensating foot valve for up and down.
- Optional hand valve mounted on rail.
- Optional Arch tool slide or Picker tool holder

Global Mining Products was founded by a group of individuals with years of experience in the heavy equipment industry who share a vision to provide quality products and services to the Mining, Oil and Gas, Logging, Trucking and Wind Industries at reasonable prices. Since the company's inception, Global Mining Products enjoys a worldwide reputation in providing a variety of top-quality products, trademark customer services and guaranteed best value.

At Global Mining Products, we are committed to delivering quality and value to our customers and partners by tailoring our products and specialized services to our customer's needs and priorities such as safety, productivity, cost savings and return on investment.

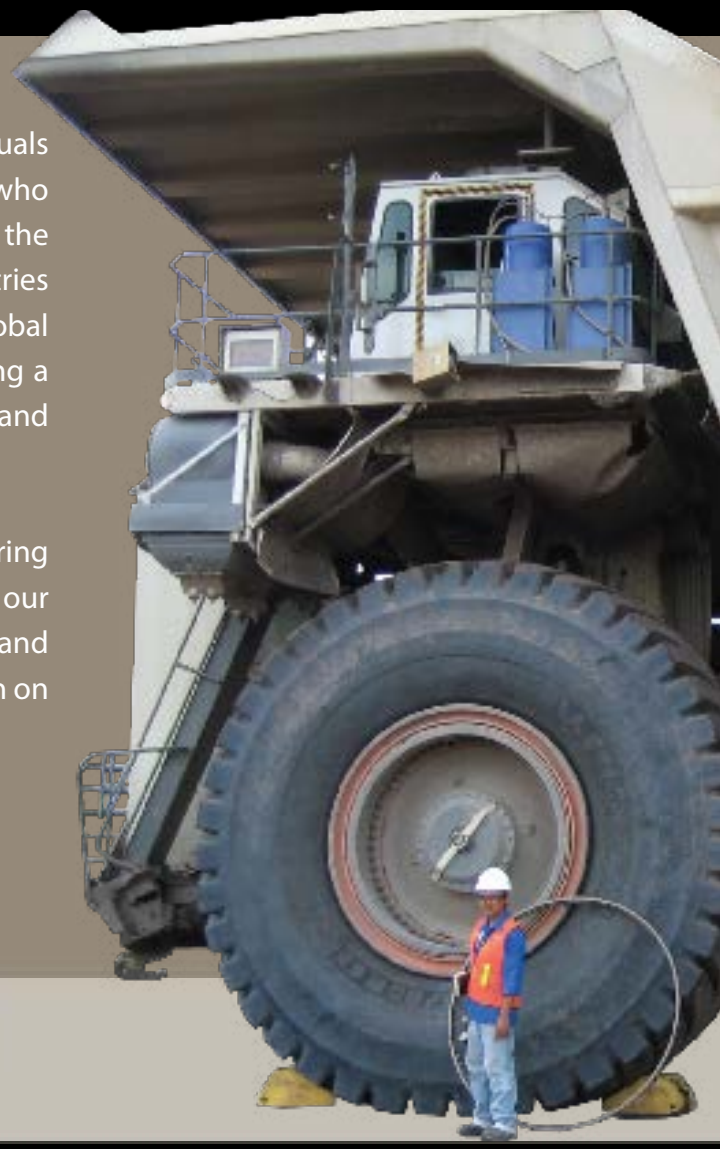

GLOBAL MINING
PRODUCTS

Quality, Service, Value

HEAD OFFICE - CANADA
Global Mining Products Inc
107-2567 192nd Street
Surrey, B.C. V3S 3X1
Ph: 604.538-0058 TF: 877-576-2855
Fx: 604.541-2850 TF: 877-576-2854
sales@globalminingproducts.com

USA
Global Mining Products Inc
400 Front Street
Elko NV 89801
Ph: 775.778.3410
Fx: 775.778.3418
elko@globalminingproducts.com

INDONESIA
PT GloMinPro Indonesia
Jl. Projakal Km.5,5 No. 65 RT. 031
Graha Indah Balikpapan 76126
East Kalimantan, Indonesia
Phone: 62-542-874097
Fax: 62-542-874039
sales@glominpro.com

At Global Mining Products, we are committed to delivering quality and value to our customers by tailoring our products and specialized services to our customer's needs and priorities such as safety, productivity, cost savings, and return on investment.

Industry Proven High Quality Product Line Includes:

- Torque Tools
- Valve Hardware
- Hydraulic Tools
- Sockets
- Hubs and Axles
- Extruders
- Calibration Systems
- Hydraulic Jacking Systems
- Tire Pressure Gauges
- Rims and Wheels
- Tire Pressure Gauges
- Vulcanising Equipment

For more information please visit:

www.globalminingproducts.net

GLOBAL MINING PRODUCTS

Call Global Mining Products Toll Free: 877-576-2855

V0814

QUALITY, SERVICE, VALUE